KONINKLIJKE AKADEMIE VAN WETENSCHAPPEN TE AMSTERDAM.

PROCEEDINGS OF THE MEETING

of Saturday September 29, 1906.

(Translated from: Verslag van de gewone vergadering der Wis- en Natuurkundige Afdeeling van Zaterdag 29 September 1906, Dl. XV).

CONTENTS.

M. NIEUWENHUIS-VON UEXKÜLL GÜLDENBAND: "On the harmful consequences of the secretion of sugar with some myrmecophilous plants". (Communicated by Prof. J. W. MOLL), p. 150.

H. KAMERLINGH ONNES: "Methods and apparatus used in the cryogenic Laboratory at Leiden. X. How to obtain baths of constant and uniform temperature by means of liquid hydrogen", p. 156. (With 3 plates); XI. "The purification of hydrogen for the cycle", p. 171. (With 1 plate); XII. "Cryostat especially for temperatures from — 252° to —259°", p. 173. (With 1 plate); XIII. "The preparation of liquid air by means of the cascade process", p. 177. (With 1 plate); XIV. "Preparation of pure hydrogen through distillation of less pure hydrogen", p. 179.

H. KAMERLINGH ONNES and C. A. CROMMELIN. "On the measurement of very low temperatures IX. Comparison of a thermo element constantin-steel with the hydrogen thermometer". p. 180.

H. KAMERLINGH ONNES and J. CLAY: "On the measurement of very low temperatures X. Coefficient of expansion of Jena glass and of platinum between + 16° and —182°, p. 199. XI. A comparison of the platinum resistance thermometer with the hydrogen thermometer, p. 207. XII. Comparison of the platinum resistance thermometer with the gold resistance thermometer", p. 213.

JAN DE VRIES: "Quadratic complexes of revolution", p. 217.

J. K. A. WERTHEIM SALOMONSON: "A few remarks concerning the method of the true and false cases". (Communicated by Prof. C. WINKLER), p. 222.

J. J. VAN LAAR: "The shape of the spinodal and plaitpoint curves for binary mixtures of normal substances. 4th Communication: The longitudinal plait". (Communicated by Prof. H. A. LORENTZ), p. 226. (With 1 plate).

Botany. — *"On the harmful consequences of the secretion of sugar with some myrmecophilous plants."* By Mrs. M. NIEUWENHUIS-VON UEXKÜLL-GÜLDENBAND. Ph. D. (Communicated by Prof. J. W. MOLL).

(Communicated in the meeting of June 30, 1906).

During my residence of about eight months at Buitenzorg in 1901 I occupied myself chiefly with an investigation of the structure and peculiarities of the sugar-secreting myrmecophilous plants. The results of these observations, extending over some 70 plants, are inconsistent with the opinion expressed by DELPINO, KERNER, TRELEASE, BURCK and many others, that the extrafloral secretion of sugar by plants would serve to attract ants which in return would protect the plants against various harmful animals.

For I was unable to observe in a single instance that the secretion of sugar is useful to the plant; on the other hand it appeared to me that the ants feed on the sugar, but that, instead of being useful at the same time, they injure the plant indirectly by introducing and rearing lice; moreover the extrafloral nectaries attract not only ants but also numbers of beetles, bugs, larvae, etc. and these are not content with the sugar alone, but at the same time eat the nectaries themselves and often consume the leaves and flowers to no small extent.

In about one third of the plants, investigated with this purpose, the secretion of sugar in this way certainly does much harm; with another third the plants experience only little harm by attracting the undesirable visitors, while with the last third no indication at all could be found that by secreting sugar they were worse off than other plants.

Of those that were indirectly injured by secreting sugar I here only mention a few examples out of the many which I shall consider more extensively elsewhere.

Spathoglottis plicata Bl. is a common orchid in the Indian archipelago. In the environs of Buitenzorg it is e.g. found on the Salak, and it is used in the Botanical Garden to set off the beds in the orchid quarter. Its leaves (all basal leaves) have a length of as much as 1.20 M., according to SMITH, they are narrow, have a long point and are folded lengthwise; their inflorescence is erect, reaches a height of about 2 metres and bears at its extremity, in the axils of coloured bracts, a number of flowers, the colour of which varies from red violet to white. The bracts and perianth leaves have blunt,

thick and darker coloured points. On the inflorescences two kinds of ants always abound, one large and one small species. Even when the flower-buds are still closed the ants are already found on the bracts and no sooner are the flowers open than the ants also attack the perianth leaves. It appeared that sugar was secreted as a bait here.

In order to prove this the flowers were placed for some time under a damp glass bell-jar; after a few hours by means of FEHLING'S reagent sugar could be proved to be present in the liquid secreted by the leaves at the exterior side. I could find no special organs for this secretion, however; probably the secretion is an internal one the product being brought out by the epiderm or the stomata.

It was already known to DELPINO that some orchids secrete sugar on the perianth; the remarkable point with the just mentioned *Spathoglottis* is that the ants have such an injurious influence on it. Whereas namely the small species remains on the flowers and is content with the sugar there secreted, the big species also descends to the basal-leaves and attacks these also, often to such an extent that only a skeleton of them remains. These harmful big ants are not expelled at all by the much more numerous small ones. It further appeared most clearly that the secretion of sugar was the reason indeed why such important organs as the leaves were eaten by the big species. The proof was namely afforded by those plants that had finished flowering and bore fruit; with these secretion of sugar took place no longer and the leaves, which were produced in this period, remained consequently uninjured. So it was the secretion of sugar during the flowering period which attracted the ants, while the leaves as such were no sufficient bait.

A second instance of the great harm that may be caused to the plants themselves by the secretion of sugar, is seen with various tree- and shrublike *Malvaceae*. In the Botanical Garden stands an unnamed tree, a *Malvacea* from Indo-China. This not only has nectaries on the leaves and calyx, but also offers the ants a very suitable dwelling-place in the stipules, which occur in pairs and are bent towards each other. The spaces formed in this way are indeed inhabited by ants, but not by so many as might be expected. The reason is that in spite of the abundance of nectaries they find no sufficient food, since on these trees a species of bugs occurs which not only consume the secreted sugar but also eat the nectaries themselves. These bugs moreover injure the leaves to such an extent that the tree suffers from it, as may be seen by a cursory examination. The same may be stated of a tree named "*Malvacea Karato*" and of some other species of this family.

In order to prove that the secretion of sugar by attracting harmful insects is indeed injurious to these trees it would still be necessary to show that they remain uninjured when the secretion of sugar does not take place. This proof is readily afforded by some other *Malvaceae*.

Two shrublike *Malvaceae* of common occurrence in India, namely *Hibiscus rosa sinensis L.* and *Hibiscus tiliaceus L.* have nectaries on their leaves. They are not frequented by ants or other harmful insects, however, because in the nectaries, as far as my observations go, a fungus always occurs, which may be recognised already from the outside by its black colour. This fungus prevents the secretion of sugar, and the nectaries cease to have an attraction for insects which otherwise would be harmful to the plant. These shrubs by their healthy appearance contrast strongly with the above mentioned plants in the *Malvaceae* quarter, which are frequented by ants and other insects.

On account of the circumstance that the extrafloral nectaries are found chiefly on and near the inflorescences, BURCK proposed the hypothesis, that in some cases they would serve to attract ants into the neighbourhood of the flowers in order to protect these against bees and wasps, which would bore them and rob honey. But even with the plants investigated by him I could find no confirmation of his hypothesis. First the nectaries only rarely occur on the inflorescences exclusively; also the plants mentioned by him as proof as: *Thunbergia grandiflora* Roxb., *Gmelina asiatica L.*, and *Gmelina bracteata*, *Nycticalos macrosyphon* and *Nycticalos Thomsonii* cannot serve as examples, since these plants also on their vegetative parts such as leaves and stems possess nectaries, which according to him are not present there or are not mentioned. In regard to the so-called "food-bodies" (BURCK'sche Körperchen) on the calyx of *Thunbergia grandiflora*, it appeared to me that these are no "food-bodies" at all, but ordinary sugar-secreting deformed hairs which I also found on the bracts, leaves and leaf-stalks of this plant.

Further it appeared to me that the number of bored flowers stands in no relation to the number of nectaries occurring on the calyx, as should be the case according to BURCK. It is much more dependent on external factors, as e. g. the more or less free situation of the plants, the weather etc.

As an example the creeper *Bignonia Chamberlaynii* may be mentioned. Of this plant on many days only 1,6 % of the fallen flowers appeared not to have been bored by *Xylocopa coerulea*, although numerous ants always occur on the nectaries of the calyx.

An example of the fact that the more or less free situation influences the number of perforations of the flowers is found in two species of the genus *Faradaya*, both having nectaries on the calyx and the leaves. With *Faradaya papuana* SCHEFF., which stands in the Botanical Garden at Buitenzorg surrounded by many other richly flowering plants, the flowers are often perforated by a boring wasp; of the fallen flowers only 1 % was undamaged. This was different with another still unnamed species of the same genus which, as far as the nectaries were concerned, showed no difference with the former and grew at some distance from it in a less open site. Its branches hung partly to the ground and bore far fewer flowers than *Faradaya papuana*. Now of this three 19,3 % of the flowers remained unperforated.

And in regard to the weather it appeared that the number of bored flowers closely depends on it. After a sunny day a much larger number of flowers had been bored the next morning than when rain had prevented the insects from flying out. This was e. g. very conspicuous with *Ipomoea carnea* JACQ., a shrub having nectaries as well on the leaves as on the calyx, the latter being bored by *Vespa analis* and two *Xylocopas*. Collected in the morning without regard to the weather of the preceding day 90% of the fallen flowers were bored; after rainy days 57 % of the flowers were damaged and after sunny days even 99,1 % were bored.

From this appears most clearly how little value must be assigned to statistical data about the perforation of flowers and about their being eventually protected by ants if not at the same time all other circumstances which may influence the results have been taken into account.

When trying to fix the part, either favourable or otherwise, played by insects with regard to a plant, one meets with greater difficulties in the tropics than e.g. in Middle Europe, because the vegetative period lasts so much longer. So one may meet an abundance of definite insects during one part of that period which are not found during another part. This special difficulty of the question whether special arrangements in a plant form an adaptation to a definite animal species is still enhanced in a botanical garden by the circumstance that there nearly all the plants are in a more or less uncommon site or surroundings. Yet here also the mutual behaviour of the animals frequenting the plants may be investigated as well as their behaviour towards the plants themselves, while the results enable us to draw some justified conclusion as to the mutual relations in the natural sites of these plants. I took this point of view when I began my

investigation and among others put myself the following questions to which the here briefly mentioned answers were obtained:

1. On what parts of plants is extrafloral secretion of sugar found?

In the cases examined by me I found secretion of sugar on the branches, leaves, stipules, bracts of different kind, peduncles and pedicels, ovaries and the inner and outer side of calyx and corolla, in each of these organs separately or in a great number of different combinations. The most commonly occurring of these combinations were: *a.* on leaf-sheaths and calyx together, *b.* on the leaf-blade only *c.* on the leaf-stalks, peduncle and calyx. Of other combinations I only found from one to three examples each.

2. Does the structure or place of the nectaries clearly indicate that they are made for receiving ants?

Except in a few cases (as the nectaries occurring in the closely assembled flowers of *Gmelina asiatica* Scheff. on that side of the calyx, that is turned away from the axis of the inflorescence) this question must be decidedly answered negatively. Although it seems as if the very common cup shape of the nectaries were eminently suitable for storing the secreted honey, yet on the lower side of the leaves these nectaries are for the greater part found with their opening turned downward. I remind the reader of the two large, also downwardly directed cup-shaped nectaries at the base of the side leaves of some species of *Erythrina*.

The frequent occurrence of nectaries on the calyces, which only in the budding period secrete honey, seems to indicate that these buds require special protection. But inconsistent with this view is the fact that sometimes, according to my observations, only half of the flowers has nectaries in the calyces (e.g. *Spathodea campanulata* Beauv.).

With many species of *Smilax* only part of the branches attracts ants and these are branches that carry no flowers and so, according to the prevailing conception, would least require protection. It is difficult to make the idea of the protection of the flowers agree with the fact that nectaries occur on the inner and outer side of the upper edge of the tube of the corolla of *Nycticalos macrosyphon*, *Spathodea serrulata* and others. Attracting ants to the entrance of the corolla, which is the very place where the animals causing cross-fertilisation have to enter, has certainly to be called unpractical from the biologist's point of view.

Against the conception that these plants should require protection, also the fact pleads that exactly with young plants, where protection would be most necessary, these baits for protective ants are absent.

A short time ago ULE [1]) has drawn attention to this as a result of his investigation of American plants.

3. Is sugar secreted in *all* nectaries?

This is not the case; in some nectaries I could detect no secretion even after they had stayed for a long time under a bell-jar; this was the case e.g. with the leaves of *Gmelina asiatica*. Consequently they are not frequented by ants, although these insects always occur on the similarly shaped but strongly secreting nectaries of the calyx.

The quantity of the secreted substances moreover fluctuates with the same nectaries of the same plant and depends on many external and internal influences.

4. Are all the products secreted by the nectaries always and eagerly consumed by the ants?

Evidently this also is not always the case, for whereas the nectaries of some plants are constantly frequented by ants, with others the nectaries so to say overflow, without a single animal visiting them. (So with some species of *Passiflora*).

5. At what age of the organs do the nectaries secrete sugar?

As a rule the nectaries of the inflorescences cease to secrete as soon as the flowers are opened; those of the leaves even only functionate in the youngest stages of development.

6. Are the ants that frequent the plants with nectaries hostile towards other visitors?

Although I daily watched the behaviour of the ants with the extrafloral nectaries for hours, I have never observed that they hindered other animals in any way. On the *Luffa* species one may see the ants at the nectaries peacefully busy by the side of a species of beetles which does great damage to the plant by eating leaves and buds.

The results of my investigations of some wild plants in Java in their natural sites agreed entirely with those obtained in the Buitenzorg Botanical Garden.

Exactly those species of ants that occur on the so-called "ant-plants" of the Indian archipelago, seem to belong to the harmless ones; the dangerous species with powerful mouth-apparatus, e.g. those which are called *semut ranggrang* in West Java and according to Dr. VORDERMAN are used by the Malay for defending Mango trees against beetles, are carnivorous. So these ants have to be specially allured by hanging animal food (dead leguans) in the trees to be protected.

---

[1]) ENGLER's Bot. Jahrbücher. Heft III, Bd. 37, 1906.

What the real meaning is of the often so highly differentiated organs as many extrafloral nectaries are and of the secretion of sugar which they present in most cases, can only be settled by new investigations which however will have to bear not only on the biology but also on the physiology of the plant.

Physics. — "*Methods and apparatus used in the cryogenic laboratory at Leiden. X. How to obtain baths of constant and uniform temperature by means of liquid hydrogen.*" By Prof. H. KAMERLINGH ONNES. Communication N°. 94*f* from the Physical Laboratory at Leiden.

(Communicated in the meeting of 28 May, 1906).

§ 1. *Introduction.* Communication N°. 14 of Dec. '94 treated of the results I had obtained after I had employed regenerators for the cascade method, and especially discussed the way how to obtain a permanent bath of liquid oxygen to be used in measurements at the then observed lowest temperatures. At the end of that paper I expressed the hope to be able to construct a cycle of hydrogen similar to that of oxygen. A mere continuation of the cascade method would not do. By means of liquid oxygen or nitrogen, even when they evaporate in vacuo, we practically cannot reach the critical temperature of hydrogen; for the liquefaction of this gas we had therefore to avail ourselves of cooling by adiabatic expansion.

In Comm. N°. 23 of Jan. '96 I made some remarks on what could be derived from VAN DER WAALS' law of corresponding states for the liquefaction of hydrogen following this method. I had found that an apparatus to liquefy hydrogen beginning with — 210° C. might be constructed almost after the same model as an apparatus that had proved suitable for the liquefaction of oxygen beginning with ordinary temperatures and without any further frigorific agents. My efforts, however, to obtain an apparatus for isentropic cooling by combining to a regenerator the outlet- and inflow-tubes of a small expansion motor, fed with compressed gas, had failed. Therefore I directed my attention towards the then newly published (1896) application of the JOULE-KELVIN process (LINDE's apparatus for liquefying air and DEWAR's jet of hydrogen to solidify oxygen).

Though the process of LINDE was the most promising, because he had succeeded with his apparatus to obtain liquid air statically, yet it was evident that only the principle of this method could be followed.

The cooling of an apparatus of dimensions like the first of LINDE (weight 1300 kilogrammes) by means of liquid air (oxygen) evaporating in vacuo could not be thought of. And yet, according to what has been said above, this had to be our starting point.

It rather lay to hand to magnify the spiral (enclosed in a vacuum glass) such as DEWAR had used for his jet of hydrogen to solidify oxygen, and so to get an apparatus with which air could be liquefied, and which could then serve as a pattern for an apparatus to liquefy hydrogen. It was indeed a similar construction with which in 1898 DEWAR had statically liquefied hydrogen for the first time. About the installation which apparently afterwards enabled DEWAR to collect large quantities of liquid hydrogen nothing further has come to my knowledge.

The arrangement of the Leiden hydrogen circulation is based on DEWAR'S principle to place the regenerator spiral into a vacuum glass (1896). As to the regenerator spiral itself HAMPSON'S apparatus for liquefying air (1896) has been followed because it appeared that the proportions of this spiral have been chosen very favourably, and with its small dimensions and small weight it is exceedingly fit, according to the thesis mentioned above, to serve as a model for a regenerator spiral to liquefy hydrogen of about — 205° at expansion from a higher to the ordinary pressure. The other physicists, who after DEWAR have occupied themselves with liquid hydrogen, — TRAVERS 1900 and 1904, OLSZEWSKI 1902, 1904 and 1905 (the latter rather with a view to obtain small quantities in a short time with simple accessories) — have also built their apparatus after this model.

The Leiden hydrogen liquefactor for constant use has enough peculiar features to occupy a position of its own as an independent construction by the side of the apparatus of TRAVERS and OLSZEWSKI, which do not satisfy the requirements for the Leiden measurements. Moreover I was the first to pronounce the principle according to which this apparatus is built and from which follows that the regenerator spiral fed with hydrogen that has been cooled by liquid oxygen (air) evaporating at a given low pressure, must lead to the goal.

The problem of making a circulation in order to maintain a bath of liquid hydrogen — and of this problem the arrangement of the liquefactor for constant use (which, tested with nitrogen, has really proved efficient) is only a part — has not yet been treated by others.

That also at Leiden we had to wait a long time for its solution cannot be wondered at when we consider the high demands which, I held, had to be satisfied by this cycle. For with a view to the intended measurements I thought it necessary to pour a bath of

1.5 liter into the cryostat (described in VIII of the series "Methods and apparatus used in the Cryogenic Laboratory" of these communications) and to keep it to within 0°.01 at a uniform and constant temperature. The requirements were therefore very much higher than they had formerly been for the bath of liquid oxygen. These requirements could by no means be fulfilled before I had the disposal of a vacuum pump (mentioned as early as Jan. '96 in Comm. N°. 23), (comp. Comm. N°. 83, March '03), suitable to evaporate in a short time large quantities of liquid air at a pressure of a few centimeters, and before I possessed compressors for constant working with extremely pure hydrogen. With the former instrument and the compressors, described in § 3, the liquefactor, described in § 2, delivers 3 à 4 liters of liquid hydrogen per hour. Thus I was able to bring to this assembly (28 May '06) 4 liters of liquid hydrogen prepared at Leiden the day before and to use it in several experiments.

Our installation proved quite satisfactory for operations with the afore mentioned cryostat. After we had succeeded in making with it some measurements in liquid hydrogen boiling under ordinary and under reduced pressure the vacuum glass of the cryostat cracked and only by mere accidence the measuring apparatus were spared. Therefore we have constructed another modified cryostat, to be described in XII, which besides insuring the safety of the measuring apparatus has the advantage of using less liquid hydrogen than the cryostat, described in VIII (Comm. N°. 94^d, June '05). This new cryostat entirely satisfies the requirements; the temperature is kept constant to within 0°,01. It is noteworthy that while the measurements are being made the cryostat shows in no way that we are working with a bath of no less than 1.5 liter of liquid hydrogen.

I wish to express thanks to Mr. G. J. Flim, mechanist at the cryogenic laboratory, for his intelligent assistance. Under his supervision the liquefactor and cryostat, to be described in the following sections, and also other accessories have been built upon my direction in the workshop of the laboratory.

§ 2. *The hydrogen liquefactor for constant use.*

a. The apparatus does not yet entirely realize the original design [1]).

[1]) It might be improved by dividing the regenerator spiral in several successive coils, each opening into the next with its own expansion-cock, where the pressures are regulated according to the temperatures. Compare the theory of cooling with the Joule-Kelvin process and the liquefying by means of the Linde process given by van der Waals in the meeting of Jan. 1900.

The latter is represented schematically by fig. 1 on Pl. I and hardly requires further explanation. The compressed hydrogen goes successively through the regenerator coils D_4, D_3, D_2, D_1, C, B, A. B is immersed partially in a bath of liquid air which, being admitted through P, evaporates at a very low pressure; D_4, D_3, C and A are surrounded by hydrogen expanding at the cock M, and D_1 and D_2 by the vapours from the airbath in F. As, however, we can dispose of more liquid air than we want for a sufficient cooling of the admitted hydrogen, and the vacuum pump (comp. Comm. N°. 83, March '03) has a greater capacity than is required to draw off the evaporating air [1]) at reduced pressure, even when we sacrifice the regenerator working of the spirals D_1, D_2, D_3 and D_4, we have for simplicity not yet added the double forecooling regenerator D, by means of which a large quantity of liquid air will be economized, and hence the apparatus consists only of one forecooling regenerator C, the refrigerator F with cooling spiral B and the principal regenerator A in the vacuum glass E with a collecting vessel L, placed in the case V, which forms one complete whole with the case U.

b. The principal regenerator, Pl. I fig. 2, consists of 4 windings of copper tubing, 2.4 m.m. in internal diameter and 3.8 m.m. in external diameter, wound close to each other and then pushed together, indicated by A_1, A_2, A_3 and A_4, (number of layers 81; length of each tube 20 M.). As in the ethylene regenerator (Comm. N°. 14, Dec. '94, and description of MATHIAS [2]), fig. 1F) and in the methyl chloride regenerator (Comm. N°. 87, March '04, Pl. I) the windings are wound from the centre of the cylinder to the circumference and again from the circumference to the centre round the cock-carrying tube M_4, and are enveloped together in flannel and fit the vacuum glass E_0 (the inner and outer walls are marked with E_{01} and E_{02}). Thence the liquid hydrogen flows at E_1 into the collecting vessel L_0. At M_{00} the four coils are united to one channel which (comp. cock T in fig. 3 of MATHIAS' description l.c.) is shut by the pivot point M_{11} moved by the handle M_{21}. The packing M_3 hermetically closes the tube M_4 at the top, where it is not exposed to cooling (comp. MATHIAS' description l.c.). The hydrogen escapes at the side exactly as at the ethylene cock L, fig. 2 in MATHIAS' description l.c., through 6 openings M_{01} and is prevented from rising or circulating by the screens M_{02} and M_{03}.

c. The new-silver refrigerator case F_1 is suspended in the new-

[1]) When using oxygen we might avail ourselves of cooling down to a lower temperature, which then must be carried out in two steps (comp. § 4*b*).

[2]) Le laboratoire cryogène de Leyde, Rev. Gen. d. Sc. Avril 1896.

silver case U_1, from which it is insulated by flannel U_{64}. A float F_{31} indicates the level of the liquid air, of which the inflow is regulated through the cock P_{01} with pivot P_{11} and packing P_3 identical with the cock mentioned above, except that the glass tube with cock is replaced by a new-silver one P_4.

The evaporated air is drawn off through a stout copper tube F_2 (comp. § 4*b*). The 2 outlet tubes B_{12} and B_{22} of the spiral B_{11} and B_{21} (each 23 windings, internal diameter of tube 3.6 m.m., external diameter 5,8 m.m., length of each 6 M.) are soldered in the bottom. The two inflow tubes B_{10} and B_{20} are soldered in the new-silver cover, on which the glass tube F_4 covering the index F_{32} of the cork float F_{31} are fastened with sealing wax (comp. for nitrogen Comm. N°. 83 IV, March '03, Pl. VII).

d. The forecooling regenerator spiral C_1, C_2, C_3, and C_4 is wound in 4 windings like A, wrapped in flannel and enclosed in the cylinder of the new-silver case U_2. The four windings (internal diam. of the tubing 2.4 m.m., external diam. 3.8 m.m., number of layers 81, length of each tube 20 M.) branch off at the soldered piece C_{01} from the tube C_{00}, soldered in the cover of U_2. They unite to the two tubes C_7a and C_7b through which the hydrogen is led to the refrigerator. The axis of this spiral is a thin-walled new-silver tube C_6 shut at the top.

The hydrogen blown off is expelled through the tube U_5.

e. The liquid hydrogen is collected in a new-silver reservoir L_1, fitting the vacuum glass L_0, which by means of a little wooden block V_7 rests on the wood-covered bottom of the insulated case V_1, which is coated internally with paper V_{64} and capoc V_{68}. Thanks to L_1 the danger of bursting for the vacuum glass is less than when the hydrogen should flow directly from E_1 into the glass L_{02}. This beaker moreover prevents rapid evaporation in case the glass should burst (comp. § 1).

The level of the liquid hydrogen is indicated by a float L_{200}, which by means of a silk cord L_{21}, slung over the pulleys L_{22} and L_{23} is balanced by an iron weight L_{24}, moving in a glass tube V_{31}, which can also be pulled up and down with a magnet from outside. The float is a box L_{00} of very thin new-silver, the hook L_{201} is a bent capillary tube open at both ends and soldered in the cover. The glass V_{31} fits by means of india rubber on the cylinder V_{32}, which is connected with the case by means of a thin-walled new-silver tube V_{30}.

The hydrogen is drawn off through the new-silver siphon tube N_{61}, which is continued as the double-walled tube N_{51} N_{501}, leading

towards the delivery cock N_{01}. Here, as at the ethylene cock (description of MATHIAS l. c. fig. 2), the packing N_3 and the screw-thread are in the portion that is not cooled. The pin N_1, made of a new-silver tube, passes through the cock-carrying tube N_4. Both the outlet tube N_0 and the delivery cock N_4 are surrounded by a portion of the cold hydrogen vapours, which to this end are forced to escape between the double wall of the tube through N_{504} and along Kha (Kd on Pl. II). The outer wall N_{501}, N_{502} of the double-walled tube is insulated from the side tube V_{21} at the case V_{20} by means of wool.

The glass L is covered with a felt cover L_3, fitted at the bottom with a sheet of nickel-paper to prevent radiation towards the liquid hydrogen. This cover fits tightly on the lower end E_2 of E and rests on the tube N_{501} and the pulley-case L_{22}.

f. We still have to describe the various safety arrangements to prevent the apparatus from bursting when the cock M should suddenly admit too much gas, as might occur when the opening has been blocked by frozen impurities in the gas, which suddenly let loose or when one of the tubes breaks down owing to the same blocking or an other cause.

For this purpose serves in the first place the wide glass tube W_1, which ends below mercury. The quantity of gas which of a sudden escapes, and the great force with which the mercury is sometimes flung away rendered it necessary to make a case W_{30} with several screens W_{31} all of varnished card-board to collect the mercury and to reconduct it into the glass W_2 (where a sufficient quantity of it must be present for filling the tube during the exhaustion).

If the pressure in the reservoir rises higher than that for which the safety tube is designed, the thin-walled india rubber tube V_{42}, which is drawn over the perforated brass cylinder wall V_{41} (separated from it by a thin sheet of tissue-paper), breaks. The safety apparatus is connected with the case V_1 by a wide new-silver tube V_{40}.

In order to avoid impurities in the hydrogen in the liquefactor through diffusion of air the india rubber cylinder V_{432} that is drawn over the rings V_{431} and V_{430} after being exhausted is filled through the cock V_{44} with hydrogen under excess of pressure; during the exhaust the india rubber cylinder V_{432} is pressed against the india rubber wall V_{42}.

An arrangement of an entirely identical construction protects the case U_1, which encloses the principal regenerator, and the case U_2 which encloses the forecooling regenerator C.

As to the protection against pressure which may occur in consequence of evaporation of air, it was sufficient to protect the refri-

gerator space F by means of the tube Y opening below mercury.

g. In protecting the different parts against heat from the surrounding atmosphere, care has been taken that those surfaces of which the temperature might fall below the boiling point of air and which are not sufficiently protected by the conduction from less cooled parts, should not come into contact with air but only with hydrogen. The refrigerator vessel F, for instance, is surrounded with the hydrogen which fills the cases U and V; hydrogen is also to be found in the space between the vacuum glass L and the wall of the case V; and lastly a side tube V_{20} and V_{21} branches off from the case V in order to surround with hydrogen the double-walled siphon tube N_{51}, N_{501} and the double walled cock N_4, N_{501}.

The new-silver case V, from which the vacuum glass L is insulated by layers of paper V_{64} and the refrigerator vessel F by a layer of flannel, and in the same way the new-silver case U, are further protected from conduction of heat from outside by separate wrappings of capoc V_{81}, packed within a card-board cover V_{82} pasted together. To prevent condensation of water vapour, the air in this enclosed space communicates with the atmosphere by means of a drying tube *t.dr* filled with pieces of sodium hydroxide, as in the ethylene- and methyl chloride regenerators (comp. above sub *b*).

The air-tight connection between the case U and the case V is effected by the india rubber ring *Ua*, which fits on the glass and on the strengthened rims U_{50} and V_{50} of the new-silver cases. India rubber of somewhat larger dimensions can only be used for tightening purposes when it is not cooled. In this case the conduction along the new-silver wall, which is insulated from the vacuum glass by layers of paper, is so slight that the ring-shaped strengthened rims remain at the ordinary temperature and the closure can be effected by a stout stretched india rubber ring. When the india rubber is only pressed on the glass this closure is not perfectly tight; therefore the whole connection is surrounded with an atmosphere of almost pure hydrogen, which is obtained and maintained by the india rubber ring *Uc*, which fits tightly on U_1 and V_1 and which is filled with hydrogen under excess of pressure through the cock *Ud*. Thanks to the small conduction of heat of new-silver no cooling is to be feared for the connections of V_{42} and U_{42} no more than for the packings of the cocks M_3 and N_3.

h. The cases V and U are joined and form one firm whole by the three rods *Ub* with the screw-fastenings U_{51} and V_{51}. The vacuum glass E_0, held by the india rubber ring *Ua*, rests with a wooden ring E_1 and a new-silver cylinder U_{31} against the refrigerator vessel F.

The whole construction can stand exhaustion, which is necessary to fill the apparatus with pure hydrogen. After the case U, of which the parts U_1 and U_2 are connected together by beams, and the case V are mounted separately, the vacuum glass E is placed in position and the case V is connected with the case U. The entire liquefactor is suspended from the ceiling by means of some rods and is particularly supported by the stout outlet tube F_2 for air and the outlet tube U_5 for hydrogen.

Plate II represents the circulation schematically: the pieces of apparatus in their true proportions, the connections only schematically. The liquefactor is designated by the letters Liq. The compressed hydrogen is admitted through Kc, the hydrogen blown off is let out through Khd or Khc.

i. Before the apparatus is set working it is filled with pure hydrogen (the cock M being open) by means of exhaustion and admission of pure hydrogen along Kc. In the drying tubes Da and Db the pure hydrogen is freed from any traces of moisture which it might have absorbed.

§ 3. *The compressors and the gasometers.*

a. The hydrogen is put under high pressure by means of two compressors in each of which the compression is brought about in two steps.

While other physicists use compressors with water injection running at great speed of the same kind as I have formerly arranged for operations with pure gas (comp. Comm. N°. 14 of Dec. '94, § 10, and N°. 51, Sept. '99, § 3), I have used for the hydrogen circulation slowly running compressors (see Pl. II ♂ at 110 and ♀ at 80 revolutions per minute) which are lubricated with oil. To enable constant working with hydrogen the highest degree of purity of the gas is required. For if air is mixed with the gas it is deposited in the regenerator spiral and when some quantity of it is collected there it will freeze and melt alternately through the unavoidable variations of temperature in different parts of the spiral, so that even small quantities, taking into consideration that the melted air flows downward, necessarily must cause blocking. And such small quantities of air may easily come in through the large quantity of injection water which is necessary for the above mentioned compressors with water injection or may penetrate into the pieces of apparatus which are required when the same injection water is repeatedly used. Lastly the chance of losing gas is much smaller with the last mentioned compressors

and the manipulation much easier. These compressors are made very carefully by the BURCKHARDT company at Basel.

In the first compressor (♉ Pl. II, displacing 20 M^3 per hour) the gas is raised in the first cylinder (double-acting with slide) from 1 to 5 and in the second cylinder (plunger and valves) from 5 to 25 atmospheres; in the second compressor ♑ (plunger and valves) in the first cylinder from 25 to 50 and in the second from 50 to 250 atmospheres. After each compression the gas is led through a cooling spiral. With the two first cooling spirals (those of ♉ Pl. II) an oil-separator is connected.

Safety-valves lead from each reservoir back to the delivery; moreover the packings are shut off with oil-holders (Comm. N°. 14 '94 and N°. 83, Pl. VIII). The hydrogen that might escape from the packing at ♑ is collected.

b. The high pressure compressor forces the hydrogen through two steel drying tubes ♋*a* and ♋*b* filled with pieces of sodium hydroxide (comp. § 2, *i*, and Pl. II), of which the first also acts like an air-chamber for the regenerator spiral. As in all the operations the gas (comp. *c*) originally is almost dry and comes only into contact with oil, we need only now and then run off a small quantity of concentrated sodium hydroxide solution.

c. For the usual working the compressors suck the gas from gasometers. If these should float on water the separation of the water vapour, which is inevitably taken along by the large quantities of gas displaced, which constantly come into contact with water, would give rise to great difficulties in the compression. Therefore we have used for this purpose two zinced gasometers, *Gaz a* and *Gaz b*, Pl. II, with tinned welds (holding each 1 $M.^3$) floating upon oil [1]), which formerly (comp. Comm. N°. 14, Dec. '94) have been arranged for collecting ethylene [2]).

The cock *Kpa* (*Kpb*) is immersed in oil; likewise the connection of the glass tube, through which the oil of the gasholder can be visibly sucked up till it is above the cock, with the cover are immersed in oil. The india rubber outlet tube and the connection with the

[1]) The drawing sufficiently represents the construction which has been followed for economizing oil. The gasometers can be placed outside the laboratory and therefore they are protected by a cover of galvanized iron and curtains of tarred canvas, which can be drawn round them.

[2]) Formerly it was of the utmost importance that ethylene could be kept pure and dry in the gasometers. But now the purifying of ethylene through freezing in liquid air (comp. Comm. N°. 94*e* IX § 1) has become a very simple operation and weldless reservoirs for the storage of the compressed gas are obtainable in all dimensions.

copper exhaust tube are surrounded by a second india rubber tube filled with glycerine. From the cock onward the conduction can be exhausted; to prevent the tube from collapsing during the exhaust a steel spiral has been placed in it. A float with valve *Kph* (*Kpi*) prevents the oil from being drawn over into the apparatus.

Besides these gasometers we dispose of two other gasometers holding 5 M^3 each to collect hydrogen of a less degree of purity. They are built following the same system as the zinced gasometers for the economizing of liquid, carefully riveted and caulked and float on a solution of calcium chloride. The oil-gasholders serve only for the storage of very pure hydrogen and this only while the apparatus is working.

During the rest of the time the pure hydrogen is kept in the known steel bottles shown on Pl. II at $\mathfrak{R}ha$. When we wish to liquefy hydrogen, this is blown off into the gasometer through *Kg* (*Khe*, *Kpe* and *Kpb* for instance to *Gaz b*), after this gasometer, which has been left standing filled with hydrogen, is washed out on purpose with pure hydrogen. When we stop working the hydrogen by means of $\mathfrak{G}$ and $\mathfrak{H}$ is repumped along *Kpf* and *Kpc* through *Ka* and *Kf* into the reservoirs $\mathfrak{R}ha$.

The gasometers may be connected with the pumps or the liquefactor either separately or together. The former is especially required when the cryostat is worked (comp. XII) and for the purification of hydrogen (comp. XIV).

§ 4. *The cooling by means of liquid air.*

a. The liquid air is sucked into the refrigerator vessel *F* (Pl. I), which by *Ks* (Pl. II) is coupled to the vacuumpump $\mathfrak{F}$, along the tube *Pb* connected with the siphon of a vacuum bottle $\mathfrak{A}a$ containing liquid air.

This has been filled by catching the jet of liquid air from the apparatus (Pl. IV, fig. 2) in which it is prepared (comp. XIII), into the open glass (see the annexed fig. 1) and is kept, covered with a loose felt stopper *m* (fig. 1). To siphon the liquid air into the apparatus, where it is to be used, the stopper is replaced by a cap *h* (fig. 1) with 3 tubes; one of these *d* is designed to raise the pressure in the bottle with a small handpump, the other *c* is connected to a small mercury manometer, and the third *b* reaches down to the bottom, so that the liquid gas can be let out. (When the bottle is used for other liquid gases, *d* is used for the outlet of the vapours and *c* for the admission of the liquid gas). One of the first two tubes reaches as far as the neck. It may also be used

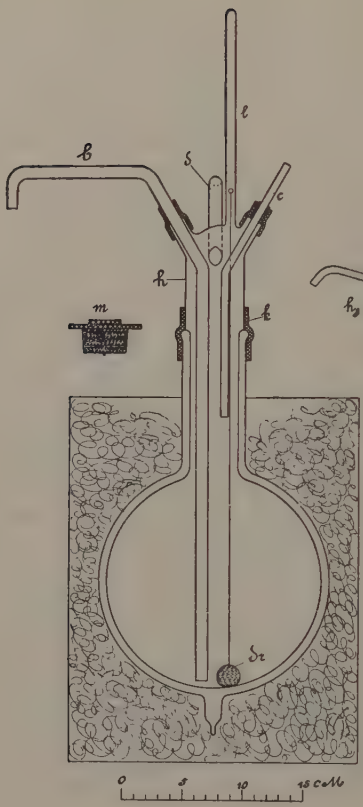

Fig. 1

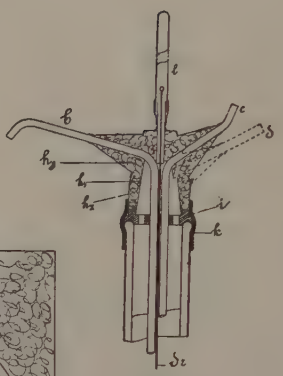

Fig. 2.

to conduct liquid air from a larger stock into the bottle. With the cap a closed glass tube *b* is connected, in which an index of a cork float *dr* indicates the height of the liquid.

The caps, as shown in fig. 1, were formerly blown of glass and the three tubes were fastened into it by means of india rubber. Afterwards the cap h_1, as shown in fig. 2, with the three tubes and with a double wall h_2 of very thin new-silver have been soldered to form one whole, which is fastened on the bottle with an india rubber ring *k*. The space between the walls is filled with capoc h_3 and the whole piece rests on the neck of the bottle by means of a wooden block *i*. After it is placed on the bottle the cap is wrapped round with wool.

With a view to the transport the vacuum glass is placed in a card-board box with fibre packing.

When the siphon is not used it is closed with a piece of india rubber tubing, fitted with a small stopper. When we wish to

siphon over, this stopper is removed and the inflow tube *Pb* (Pl. I) is connected with the siphon-tube *b* (fig. 2) with a piece of india rubber tubing. To prevent breaking of the india rubber, which through the cold has become brittle, the new-silver tubes are arranged so that they fit into each other, hence the india rubber is not strained so much.

The admission of liquid air into the refrigerator vessel is further regulated with the cock *P*, Pl. I. When the float indicates that the reservoir is almost empty, another reservoir is put in its place.

The cock *Ks* is regulated according to the readings on the mercury manometer tube *Y*.

b. The air is caused to evaporate at a pressure of 15 mm., which is possible because a BURCKHARDT-WEISS-pump $\mathfrak{F}$ Pl. II is used as vacuumpump.

The vacuumpump is the same as that used in measurements with the cryostat containing a bath at —217° (comp. Comm. No. 94^d June '05) and has been arranged to this end as described in Comm. No. 83 V. March '03. The letters at $\mathfrak{F}$ on Pl. II have the same meaning as on Pl. VIII of Comm. N°. 83. As has been described in Comm. No. 94^d VIII, June '05, this vacuumpump $\mathfrak{F}$, displacing 360 M^3 per hour, is exhausted by a small vacuumpump, displacing 20 M^3 per hour[1]) (indicated by $\mathfrak{K}$ on Pl. II).

§ 5. *How the liquefactor is set working.*

a. When the apparatus is filled with pure hydrogen, as described in § 2, and when air evaporating under low pressure is let into the refrigerator, for convenience the hydrogen, admitted through $\mathfrak{G}$ and $\mathfrak{H}$ Pl. II along *Kc*, is caused to stream through during some time with wide open cock *M*, Pl. I, for the forecooling of the whole apparatus. Then the cock *M* is regulated so that the pressure in the regenerator spiral rises slowly. It is quite possible for the apparatus to deliver liquid hydrogen at 100 atm., it has done so at 70 atm. As a rule, however, the pressure is kept between 180 and 200 atm. because then the efficiency is some times larger [2]). The liquefactor then delivers about 4 liters liquid hydrogen per hour. Part of the hydrogen is allowed to escape along *Kha* Pl. I fig. 2 (*Kd* Pl. II) for the forecooling of the siphon N_{51} Pl. I and the cock *N*.

As soon as liquid hydrogen begins to separate we perceive that the

[1]) When we use oxygen (comp. § 2 note 2), and a pressure as low as a few mm should be required, forecooling is required in the second refrigerator like *F*, where oxygen evaporates under low pressure, for instance towards $\mathfrak{K}$.

[2]) v. D. WAALS has shown the way how to compute this (comp. note 1 § 2).

cock M must be tightened a little more in order to keep the pressure within the same limits.

When liquid hydrogen collects in L rime is seen on the tube N_{503}, Pl. I, fig. 2 near the cock N.

b. The gaseous hydrogen escapes along *Khd* (Pl. II) to ℭ and to one or to both gasholders. When liquid hydrogen separates, the compressor ℭ receives, besides the hydrogen escaping from the liquefactor, a quantity of hydrogen from the gasholders along *Kpa* and *Kpb*. New pure hydrogen is then admitted from ℜ*ha*, Pl. II, along *Kg*.

c. The float (L_{200} Pl. I) does not begin to indicate until a fairly large quantity of liquid hydrogen is collected.

§ 6. *The siphoning of liquid hydrogen and the demonstration of liquid and solid hydrogen.*

a. When the float L_{200}, Pl. I, shows that the glass is filled to the top (this usually happens an hour after the liquefactor is set working) the hydrogen is siphoned into the vacuum glasses *Hydr a*, *Hydr b* etc., Pl. II, which are connected behind each other so that the cold hydrogen vapour, which is led through them, cools them successively before they are filled. When one is full the next is moved one place further.

They are fitted with caps of the same description as the bottles for siphoning liquid air, figs. 1 and 2 in the text of § 4. Pl. III represents on a larger scale 2 bottles coupled behind each other and a third which has been filled, all as on Pl. II, in side- and top-elevation. The evaporated hydrogen escapes along d'_3 and d''_3 and further along K_0 (see Pl. II) to the gasholder. The letters of the figures have the same meaning as in fig. 2; for the explanation I refer to the description of that figure in § 4.

The conduction of heat in the thin new-silver is so little that the new-silver tubes can be soldered in the caps h_3 and that they are sufficiently protected by a double wall h_{11} of new-silver with a layer of capoc between, which is again thickly enveloped in wool.

It has occurred that the india rubber ring k' has burst through the great fall of temperature, but in general the use of india rubber has afforded no difficulties, and hence the somewhat less simple construction, which would lie to hand, and through which we avoid cooling of the india rubber at the place where it must fit, has not yet been made.

b. If we desire to see the jet of liquid hydrogen flowing from

the cock N, Pl. I, we connect with the tube N_0 and the india rubber tube d_3, instead of the silvered flasks of Pl. II and Pl. III, a transparent vacuum cylinder fig. 3*a*, closed by an india rubber ring with a new-silver cap with inlet tube. After the cock is opened the india rubber outflow tube d_3 covers with rime and becomes as hard as glass; soon the first drops in spheroidal state are seen splashing on the bottom of the glass and the lively liquid fills the glass. If, as shown by fig. 3*b*, a glass cover is placed on the top, the glass may be left standing in the open air without the air condensing into it, which would hasten the evaporation. In the same manner I have sometimes filled non-silvered vacuum flasks holding 1 liter, where the liquid hydrogen boils vividly just as in the glass mentioned before. The evaporation is of course much less and the rising of the bubbles stops when the vacuum glass or the vacuum flask is placed in liquid air.

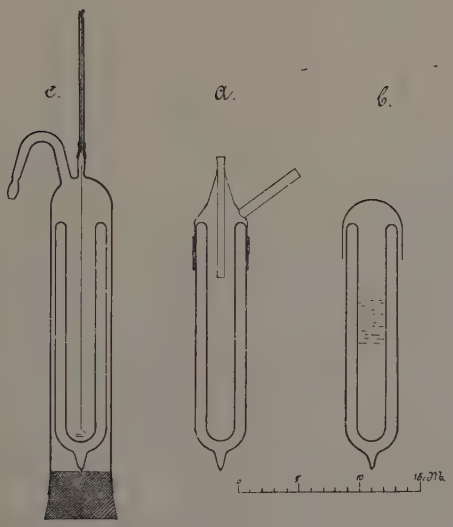

Fig. 3

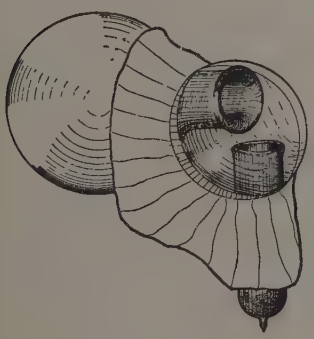

Fig. 4

To demonstrate the pouring of hydrogen from one open vessel into the other, I use a glass, cap round which a collar of thin india rubber sheet is bound (comp. the accompanying fig. 4). The flask from which and the glass into which we want to pour, the latter after being filled with liquid air and quickly turned down and up again (if this is not done quickly a blue deposit of H_2O from the air will come in), are placed under the cap, which fills with hydrogen and hence remains transparent, then with the india rubber round the neck of the bottle and round the glass we take hold of the two, each in one hand. Through the cap we can observe the pouring. The escaping hydrogen rises in the air as clouds.

In order to keep the half filled glass clear it is covered, under the pouring off cap, with a glass cap, and so it can be taken away from the pouring off cap.

c. It is very instructive to see what happens when we proceed to remove this cap and the glass is tilted over a little. Above the level of the liquid hydrogen thick snowy clouds of solid air are formed, the minute solid particles drop on the bottom through the extremely light hydrogen (specific weight $^1/_{14}$), there they collect to a white pulver which, when the hydrogen is shaken, behaves as heavy sand would behave in water. When the hydrogen is evaporated that sand soon melts down to liquid air [1]).

d. Solid hydrogen may be easily demonstrated when we place the glass, fig. 3*a*, under a bell as fig. 3*c* in which a wire can be moved up and down (for instance by fastening it into an india rubber tube) and connect the bell with the airpump. A starch-like white cake is soon formed, which can be moved up and down with the wire.

e. To fill a vacuum flask as shown on Pl. III we first cool it by washing it out with liquid air. The connection at N_0, Pl. I fig. 2 and Pl. III, is brought about simply by drawing a piece of india rubber tubing N_{81} over the new-silver tubes N_0 and C_0 fitting into each other, round which flannel is swaddled. This again is enveloped in loose wool. When some bottles are connected they are filled with pure hydrogen through the tube b_0 of *Hydr. a* after repeated exhaustion and care is also taken that each newly connected bottle is filled with pure hydrogen and that no air can enter the apparatus while the connections are being made.

When from the indications of the float L_{200} (Pl. I, fig. 2) we conclude that a bottle is full, it is disconnected, but as long as the liquid hydrogen is kept in this glass the evaporating hydrogen is allowed to escape into the gasholder, as is represented by Pl. III for *Hydr. c.* The disconnection at N_0 is simply effected by taking off the flannel band C_2, heating the piece of india rubber tubing N_{81} (unvolcanized) with one's fingers (or with a pair of pinchers arranged to this end) till it becomes soft again and can be shoved from the tube N_0.

§ 7. *Transport to the cryostat, closure of the cycle.*

a. The vacuum glasses filled with liquid hydrogen (see *Hydr. d* on Pl. II) are transported to the room where the cryostat $\mathfrak{C}r$ is mounted

---

[1]) All this has been demonstrated by me at the meeting of 28 May. To show the small specific weight of hydrogen I held a very thin-walled glass bulb, which sinks only a little in ether (as a massive glass ball in mercury), suspended by a thin thread in the glass with liquid hydrogen, where it fell like a massive glass ball in water and tapped on the bottom.

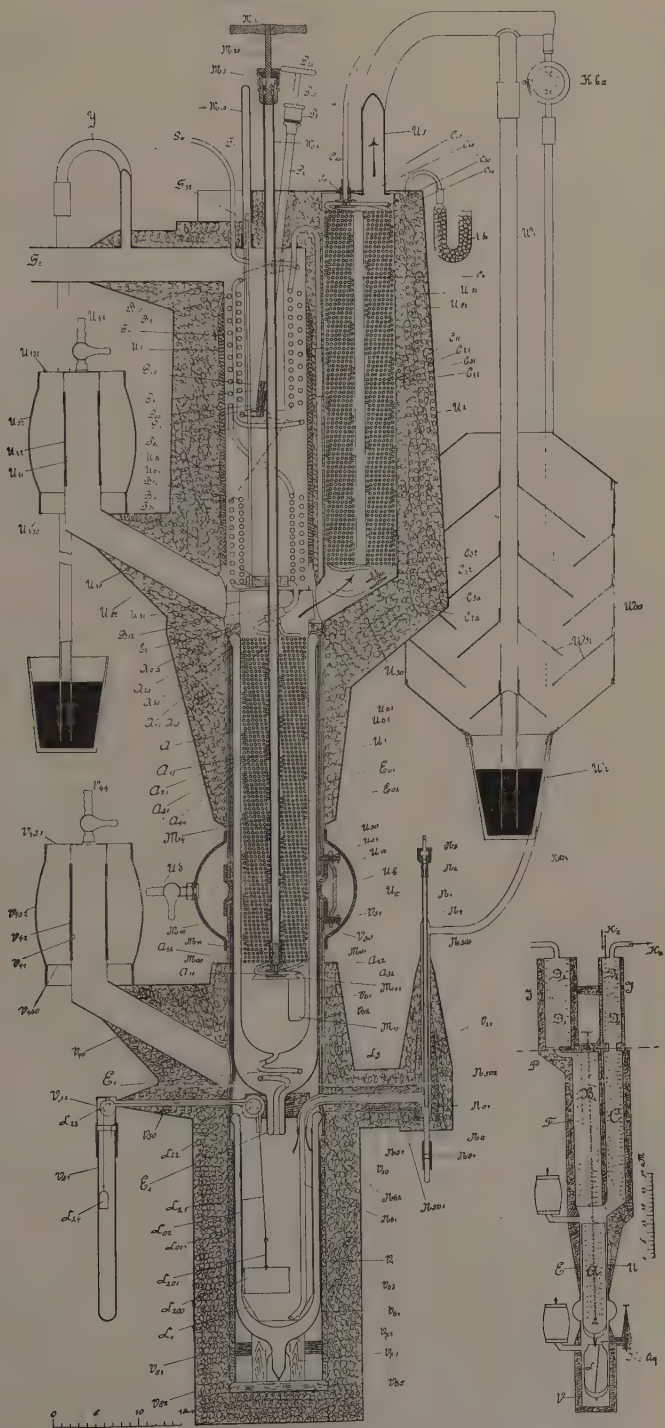

Fig 2.

Fig. 1.

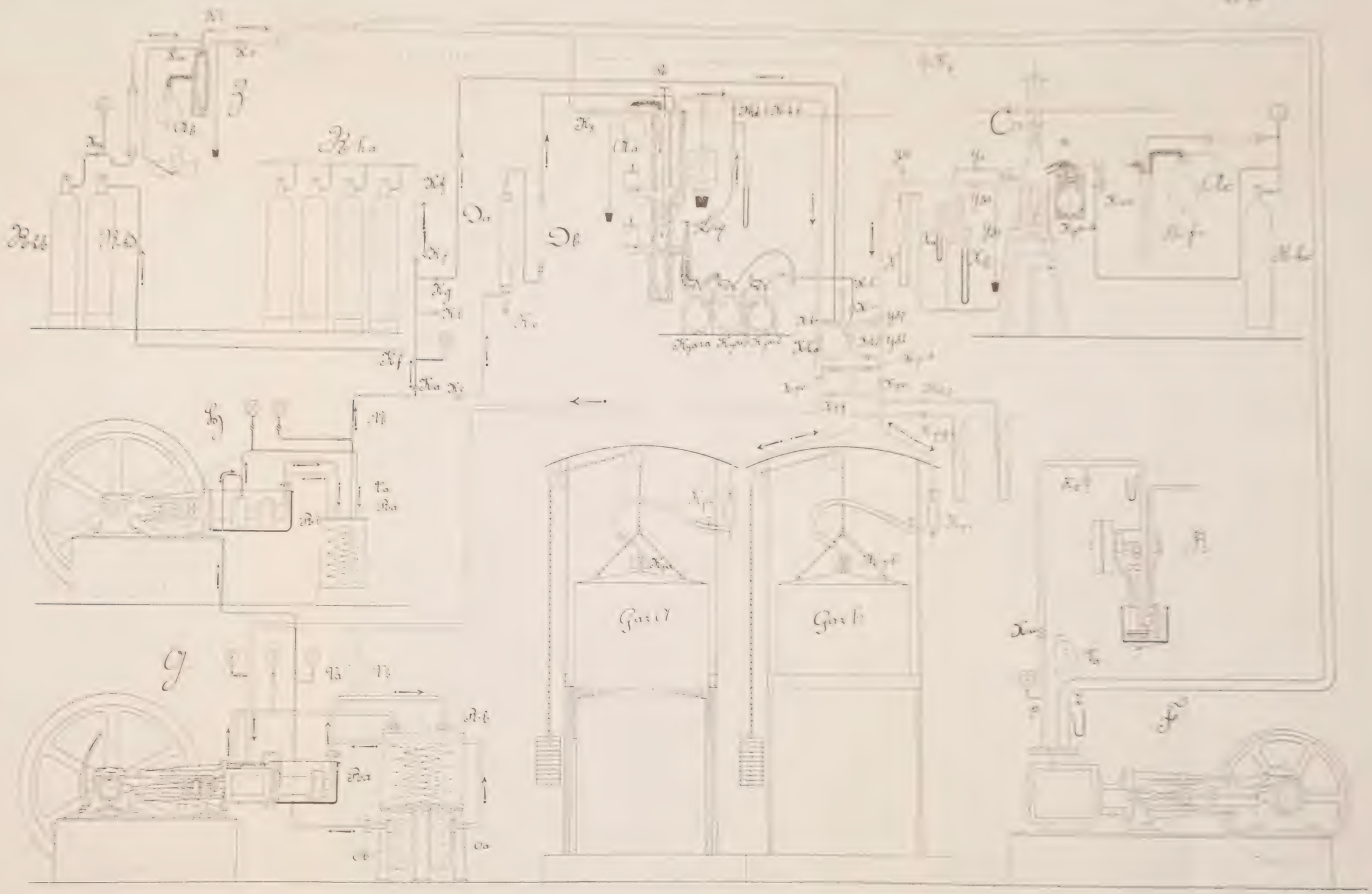

H. KAMERLINGH ONNES. Methods and apparatus used in the cryogenic laboratory at Leiden. X. How to obtain baths of constant and uniform temperature by means of liquid hydrogen.

Pl. III.

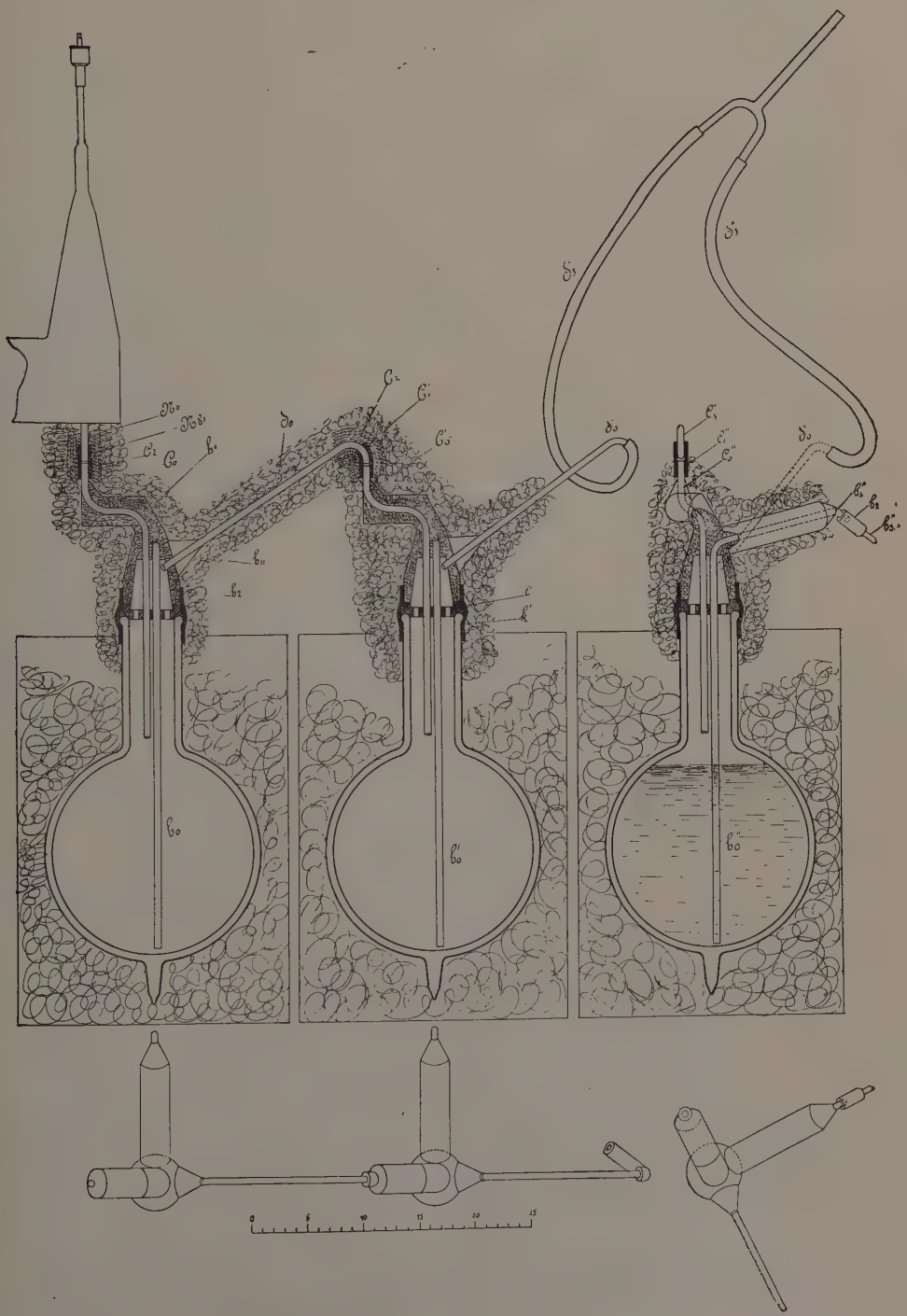

into which the hydrogen is siphoned. To this end the tube b''_1 of Pl. III is connected (again by a piece of india rubber tubing, enveloped in flannel and wool) to the inflow tube a_1 of the cryostat and the tube d_0 to an inflow tube of pure hydrogen under pressure, which is admitted from *Khc*, Pl. II, along *Kwa*. With all these connections and disconnections care must be taken that there should always be an excess of pressure in the tubes that are to be connected, that the disconnected tubes should be immediately closed with stoppers but that first the apparatus after having been exhausted should preliminarily be filled with pure hydrogen. The liquid hydrogen is not admitted into the cryostat *Cr* until the latter has been cooled — coupled in another way (see the dotted line on Pl. II) — by means of pure hydrogen which has been led from *Khc* through a cooling tube immersed in liquid air. This refrigerator is of a similar construction as the nitrogen condenser Pl. VII of Comm. N°. 83 (March '03). Instead of *Nliq* should be read H_2 and instead of *Qx liq*, *Aër liq*, which is siphoned from the vacuum flask *Ac*. (comp. § 6).

During the siphoning of the liquid hydrogen into *Cr* the rapidity of the influx is regulated after a mercury manometer, which is connected with the tube *c* on the cap *h*, Pl. III (comp. fig. 2 of § 4).

b. From the cryostat the evaporated hydrogen escapes along Y_{37} into the compressor *G*, Pl. II, which can also serve as vacuumpump and which precautiously through *P* and *Kf* at the dotted connection *Kf* stores the gas, which might contain minute impurities, in the separate reservoir *Khd*; or it escapes along Y_{32} and *Kpe* or *Kpd* into the gasholders *Gaz a* or *Gaz b*.

XI. *The purification of hydrogen for the cycle.*

a. This subject has been treated in Comm. N°. 94*d* IX. To be able always to obtain pure hydrogen, to make up for inevitable losses, and lastly to be freed from the fear of losing pure hydrogen, which perhaps might deter us from undertaking some experiments, a permanent arrangement for the purification has been made after the principle laid down in IX. The apparatus for the purification is represented on Pl. IV and is also to be found on Pl. II at 3.

The impure hydrogen from *Khb* is admitted through *Kn* and along a drying tube into a regenerator tube (see Pl. IV) consisting of two tubes enclosing each other concentrically, of which the outer *a* serves for the inflow, the inner *b* for the outlet. Outside the apparatus *a* and *b* are separated as a_0 and b_0, within the apparatus from the point *c* downwards *a* is continued as a_1 and subsequently as the spiral

a_2 to terminate at the top of the separating cylinder d, from which the gas escapes through b_1, and the impurities separated from the hydrogen as liquid escape along e and Km (comp. Pl. II). The liquid air, with which the cooling tube and the separating cylinder are cooled, is admitted along l and the cock m (and drawn from the vacuum glass $\mathfrak{A}b$, Pl. II); a float dr indicates the level of the liquid air. The evaporating air is drawn off by the vacuumpump $\mathfrak{F}$ (Pl. II) along Kt. The refrigerator vessel p is protected against heat from outside by a double wall q of new-silver with capoc v packed between, of which the lower end is immersed in a vacuum glass r_1 while the whole is surrounded with a layer of capoc enclosed in a varnished cover of card-board pasted together in the same way as for the hydrogen liquefactor. The glass tube Y, opening below mercury, serves among others to read the pressure under which the evaporation takes place.

The cock Km is turned so that some more bottles of known capacity are collected of the blown- off gas than, according to the analysis, would be formed by the impurities present in the gas. In this way the purity of the hydrogen is brought to $^1/_{20}$ %. It is led along Kl to the gasholders, and compressed by $\mathfrak{G}$ and $\mathfrak{H}$ in $\mathfrak{Khd}$.

b. A second purification is effected in the following manner. When we have operated with the liquefactor with pure hydrogen we always, after the experiments are finished, admit a portion of this not yet quite pure gas into the apparatus. After some time, usually after 4 liters of liquid hydrogen are formed, the cock is blocked. As soon as it becomes necessary to move this repeatedly to and fro — Travers and Olszewski say that this is constantly necessary but I consider it as a sign that the apparatus is about to get more and more disordered — the work is suspended and the cock M (Pl. I) closed, after which $\mathfrak{D}_a$ and $\mathfrak{D}_b$ (Pl. II) are blown off to the gasholders along K_a and K_g, and K_c is shut. The liquid hydrogen, after being siphoned, is allowed to evaporate and to pass over into the gasholder for pure hydrogen. The impurities are found when, with M and K_c closed, we return to the ordinary temperature and analyze the gas, which in $\mathfrak{D}$ has come to high pressure.

If necessary, the purified hydrogen is once more subjected to this process.

When, after the liquefactor with pure hydrogen has been worked, we go on admitting a quantity of preliminarily purified hydrogen of $^1/_{20}$ % and take care that the impurities are removed, we gradually obtain and maintain without trouble a sufficient quantity of pure hydrogen.

H. KAMERLINGH ONNES. Methods and apparatus used in the cryogenic laboratory at Leiden. XI. The purification of hydrogen for the cycle.

Pl. IV.

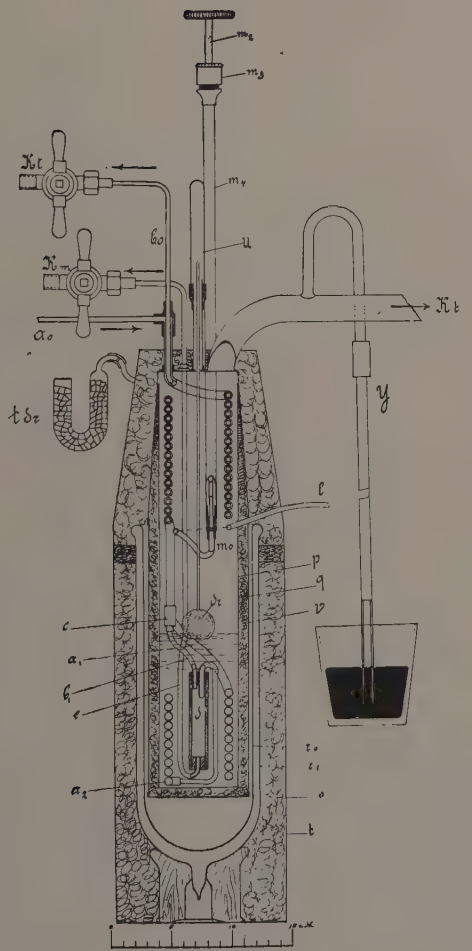

XII. *Cryostat especially for temperatures from* — 252° *to* — 259°.

§ 1. *The principle.* In X § 1 I have said that we succeeded in pouring into the cryostat of Comm. N°. 94^d VIII a bath of liquid hydrogen, maintaining it there and making measurements in it, but then the vacuum glass cracked. By mere chance it happened that the measuring apparatus which contained the work of several series of measurements came forth uninjured after removal of the sherds and fragments of the vacuum glass. With the arrangement which I am going to describe now we need not be afraid of an adversity as was imminent then. Now the bath of liquid hydrogen is protected against heat from outside by its own vapour. The new apparatus reminds us in many respects of that which I used to obtain a bath of liquid oxygen when the vacuum glasses were not yet known; the case of the cryostat then used has even been sacrificed in order to construct the apparatus described now.

The principal cause of the cracking of vacuum glasses, which I have pointed out in several communications as a danger for placing precious pieces of apparatus into them are the great stresses caused by the great differences in temperature between the inner and the outer wall and which are added to the stresses which exist already in consequence of the vacuum. To the influence of those stresses it was to be ascribed, for instance, that only through the insertion of a metal spring the vacuum tubes (described in Comm. N°. 85, April '05) could resist the cooling with liquid air. It sometimes happens that a vacuum flask used for liquid air cracks without apparent cause and with the same cooling the wide vacuum cylinders are still less trustworthy than the flasks. At the much stronger cooling with liquid hydrogen the danger of cracking increases still. Habit makes us inclined to forget dangers, yet we should rather wonder that a glass as used for the cryostat of Comm. N°. 94^d VIII filled with liquid hydrogen does *not* crack than that it does.

In the new cryostat of Pl. V the cause of the cracking of the vacuum glass has been removed as much as possible and in case it should break in spite of this we have prevented that the measuring apparatus in the bath should be injured. The hydrogen is not poured directly into the vacuum glass B'_{02} but into a glass beaker *Ba*, placed in the vacuum glass (comp. Comm. N°. 23, Jan. '96 at the end of § 4) but separated from it by a new-silver case, which forms, as it were, a lining (see X, *L* Pl. I). Further the evaporated hydrogen is led along the outer wall of the vacuum glass B'_{01}. To be able to work

also at reduced pressure and to prevent any admixtures of air from entering into the pure hydrogen used, the whole bath has been placed in a stout cylindrical copper case *Ub*, which can be exhausted.

This cryostat is especially fit for hydrogen, yet may profitably replace those described till now, at least when it is not necessary that we should see what takes place inside the bath. A modified pattern, where this has become possible, in the same way as in the cryostat with liquid oxygen of Comm. N°. 14, Dec. '94, I hope to describe erelong.

In the cryostat now to be described, as in the former, the measuring apparatus, without our changing anything in the mounting of them, will go through the whole range of temperatures from — 23° to — 90° with methyl chloride, from — 103° to — 160° with ethylene, from — 183° to — 217° with oxygen and from — 252° to — 259° with hydrogen (only for the temperatures between — 160° and — 180° we still require methane).

§ 2. *Description.*

a. The new cryostat is represented on Pl. V. The letters, in so far as the parts have the same signification, are the same as for the descriptions of the other cryostats; modified parts are designated by new accents and new parts by analogous letters, so that the explanations of Comms. N°. 83, N°. 94^c and N°. 94^d on the attainment of uniform and constant temperatures, to which I shall refer for the rest, can serve also here. Pl. II shows how the cryostat is inserted into the hydrogen cycle. In chapter X § 7 is described how the liquid hydrogen is led into the cryostat. Especially for the regulation of the temperature this plate should be compared with Pl. VI of Comm. N°. 83, March '03. Instead of *Bu Vac* on the latter plate, the compressor ⊛ serves as vacuumpump here (see Pl. II of the present paper).

b. The measuring apparatus (as on the plate of Comm. N°. 94^d VIII I have represented here the comparison of a thermoelement with a resistance thermometer) are placed within the protecting cylinder ξ_0 of the stirring apparatus. This is held in its place by 4 glass tubes ξ_{40} fitted with caps of copper tubing ξ_{41} and ξ_{42} at the ends of the rods.

The beaker *Ba*, containing the bath of liquid hydrogen, is supported by a new-silver cylinder Ba_2, in the cylindrical rim Ba_0 of which the glass fits exactly; the beaker is held in its place by 4 flat, thin, new-silver suspension bands running downwards from Ba_0 and uniting below the bottom of *Ba*. The ring Ba_0 is the cylinder Ba_2

continued, with which it is connected by six strengthened supporting ribs Ba_1. At the top it is strengthened by a brass rim Ba_2 with a protruding part, against which presses the upper rim Ua of the case U. On Ba_2 rests the cover N'_{01} in which a stopper is placed carrying the measuring apparatus. The india rubber band effects the closure (comp. also Comm. Nos. 83, 94[c] and 94[d]).

c. In the case U the vacuumglass B'_0, of which the inner wall B'_{01} is protected by the thin new-silver cup Bb, is suspended by bands L'_6 and supported by the wooden block L'_1. The card-board cover B'_4 forces the evaporated hydrogen, which escapes between the interstices of the supporting ridges, over the paste-board screen B'_{030} with notches B'_{031} along the way indicated by arrows, to escape at T'_{12}. The case is lined with felt, covered with nickel paper (comp. Comm. N°. 14, Dec. '94, and Comm. N°. 51, Sept. '99).

d. The keeping of liquid hydrogen within an enclosed space, of which the walls have for a great part a much higher temperature than the critical temperature of hydrogen, involves special safety arrangements. That this was no needless precaution appeared when the vacuum glass cracked unexpectedly (comp. X § 1) and of a quantity of more than 1,5 liter of liquid hydrogen nothing was to be seen after a few seconds. Now this disappearance is equivalent with the sudden formation of some hundreds of liters of gas, which would explode the case if no ample opportunity of escape were offered to the gas as soon as the pressure rises a little above the atmospheric.

In the new cryostat I have avoided this danger in the same way as at the time when I first poured off a bath of liquid oxygen within a closed apparatus (comp. Comm. N°. 14, Dec. '94).

The bottom of the case U is made a safety valve of very large dimensions; as cover W_2 of perforated copper with strengthened ridges it fits into the cylindrical case Ub, which is strengthened with the rim W. Over the external side of this cover (as in the safety tubes for the hydrogen liquefactor) a thin india rubber sheet W_1 — separated from the copper by a sheet of paper — is stretched, which at the least excess of pressure swells and bursts, while moreover the entire vacuum glass or pieces of it, if they should be forced out of the case, push the cover W_2 in front of them without resistance. As the airtight fit of the sheet of india rubber W_1 on the ring W is not trustworthy and diffusion through contact of the india-rubber with the air must be prevented, it is surrounded with hydrogen; this is done by filling the india rubber cylinder Wa, drawn over the supporting ring Ub_4 and the auxiliary cover Wb, with hydrogen along Wc.

The cords *Wd* serve to press the auxiliary cover *Wb* with a certain force against the safety sheet, namely by so much as the excess of pressure amounts to, which for one reason or other we want to admit into the case. To prevent the india rubber from cooling down, for then the arrangement would no longer satisfy the requirements, the lower end of the case is lengthened by the cylindrical piece Ub_2 which between the rim Ub_4 and the principal body of the case is made of new-silver to prevent the cooling of the lower rim. The entire lower part is stuffed with layers of felt and wool while also a copper flange Ub_3 by conduction of heat from outside protects the lower wall from cooling.

e. The hydrogen is admitted through the new-silver tube *a*, on which the siphon tube of a vacuumglass (X § 7) is connected with a piece of india rubber tubing a_2 (which otherwise is closed with a stopper a_4, comp. X § 4 *a*). The new-silver tube is put into the new-silver side piece *Ud*, which is soldered on the case and, being stuffed with capoc held back by a paper tube *Ue*, carries at the end a piece of cork *Uf* for support. When the vacuum glass B_0 with the case *U* are placed round the beaker *Ba*, the tube a_1 is pulled back a little. When subsequently the case is fastened in its position the tube is pushed forward until a ridge on a_1 is checked by a notch in *Ud*, so that its end projects into the beaker *Ba* and the hydrogen can flow into it. The india rubber tube a_2 forms the closure on a_1 and *Ud*.

§ 3. *Remarks on the measurements with the cryostat.*

In chapter X § 7 I have communicated how the preliminary cooling is obtained. In one of the experiments, for instance, 3 liters of liquid air were used for it and the temperature was diminished to —110°. Then hydrogen was very carefully siphoned into the cryostat under constant stirring; a quantity of 5 liters was sufficient to obtain a bath of 1.5 liter. About 0.2 liter per hour evaporated after this. During the reduction of the pressure to about 60 m.m. ± 0.2 liter evaporated, and then the evaporation remained about the same. The temperature could be kept constant to within 0.01° in the way described in the former papers. The temperature curves obtained were no less regular than those of Pl. III in Comm. N°. 83 (Febr. and March '03).

If the pressure is reduced down to 54 m.m. the tapping noise of the valves of the stirring apparatus becomes duller. This is a warning that solid hydrogen begins to deposit.

H. KAMERLINGH ONNES. Methods and apparatus used in the cryogenic laboratory at Leiden.
XII. Cryostat especially for temperatures from $-252°$ to $-259°$.

Pl. V.

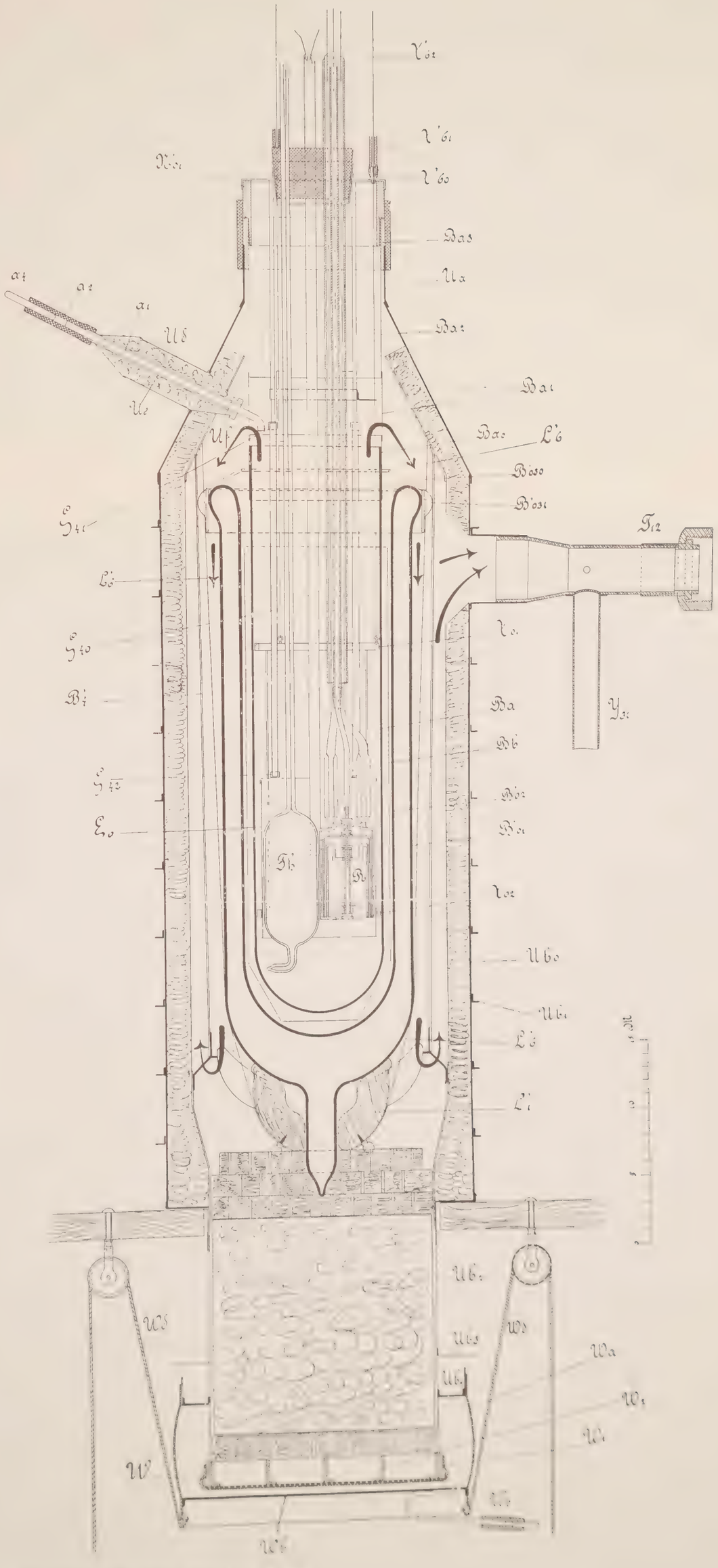

XIII. *The preparation of liquid air by means of the cascade process.*

§ 1. *Efficiency of the regenerative cascade method.* In none of the communications there was as yet occasion to treat more in detail of the preparation of liquid air by the Leiden cascade process. In the description of the preparation of liquid oxygen (in Comm. N°. 24, Dec. '94) I have said that especially the ethylene refrigerator had been constructed very carefully, and that the principle after which various cycles operating in the *regenerative cascade* can be made was embodied there.

When the new methyl chloride circulation (comp. Comm. N°. 87, March '04) was ready and the inadequate methyl chloride refrigerator was replaced by one constructed after the model of the ethylene boiling vessel with application of the experience gained, it was possible to prepare a much larger quantity of liquid oxygen (10 liters per hour easily) with the same ethylene boiling vessel. This quantity will still increase when the regenerator in the ethylene boiling vessel will be enlarged so much as our experience with the new methyl chloride regenerator has again taught to be desirable and when the exhaust tube of the ethylene boiling vessel will have been replaced by one of greater width than could be used originally. The introduction of a nitrous oxide and of a methane cycle, which in '94 stood foremost on our programme, has dropped into the background especially when, also for other reasons (in order to obtain the temperatures mentioned at the end of XII § 1), it appeared desirable to procure vacuumpumps of greater displacing capacity ('96) and these, being arranged for operations with pure gases (described in Comm. N°. 83, March '03) had become fit to be introduced into the ethylene and the methyl chloride cycles (while in general for the cryostats these two cycles were sufficient, cf. the end of XII § 1). Larger quantities of oxygen could be used in consequence, for which (as mentioned in '94) a BROTHERHOOD compressor was employed (comp. the description of the installation for operations with pure gas in Comm. N°. 51 § 3, Sept. '99). A picture of the cascade method in this stage of development accompanies a description of the cryogenic laboratory by H.H. FRANCIS HYNDMAN in "Engineering" 4 Mrch '04.

This picture represents how the oxygen cycle is used to maintain the circulation in the nitrogen cycle, described in Comm. N°. 83, March 1903. In the same way as nitrogen we also liquefy air with the oxygen cycle. When it is drawn off the liquid air streams from the tube in a considerable jet; about 9 liters of liquid air are collected per hour, so that in one day we can easily prepare half a hectoliter.

Liquid air has striking advantages above liquid oxygen when we have to store large quantities or when with the gas liquefied in the cryogenic laboratory we must cool instruments in other rooms. Only where constant temperatures are aimed at pure oxygen or nitrogen will be preferred for refrigerating purposes, and even then the liquid air can be the intermediate agent, for we need only lead the gases mentioned through a cooling tube immersed in liquid air in order to liquefy nearly as much of it as the quantity of air evaporated amounts to. And so the permanent stock of liquid air maintained in the Physical Laboratory has gradually increased, so that for several years liquid air has been immediately sent off on application both at home and abroad.

§ 2. *The airliquefactor.* The apparatus for the preparation of liquid air by means of liquid oxygen is in principle identical with that serving for nitrogen, but of larger dimensions (see Pl. VI).

Identical letters designate corresponding parts of the apparatus represented (Comm. N°. 83, Pl. VII) for the liquefaction of nitrogen. To liquefy air the ordinary atmospheric air, after being freed by a solution of sodium hydroxide from carbon dioxide, is compressed to 10 atmospheres in the spiral *RgRf*, Pl. VI fig. 1. This spiral branches off from the tube Rg_{00} in the soldered piece Rg_{01} and carries four branches Rg_1, Rg_2, Rg_3 and Rg_4. Each of these tubes has an internal diameter of 3.5 mm., an external diameter of 5.8 mm., and is 22 M. long. The spiral is wound in 63 layers in the same way as the regenerator spiral of the hydrogen liquefactor (comp. X)and, lined with flannel, it fits the new-silver tube p_0, round which it is drawn in the new silver case p. The four windings are united below to one soldered piece to the spiral *Rf*, 8 M. long, which is immersed in a bath of liquid oxygen and whence the liquid air flows through Rf_3 into the collecting apparatus (see fig. 2). This is placed by the side of the principal apparatus (see fig. 2) and contains the collecting vessel r_0, where the liquid air is separated and whence it is drawn through the siphon. The collecting glass is fitted with a float *dr*. During work we can see it rising regularly at a fairly rapid rate.

§ 3. *Further improvements.* The regenerative cascade might still be modified in many points before the principle is fully realized and before one improvement or other, made for one of the cycles, has been introduced also in the others and the efficiency is grown to a maximum; but this problem is rather of a technical nature. We prefer to spend the time at our disposal on other problems, as enough liquid air is

KAMERLINGH ONNES. Methods and apparatus used in the cryogenic laboratory at Leiden. XIII. The preparation of liquid air by means of the cascade process.

Pl. VI.

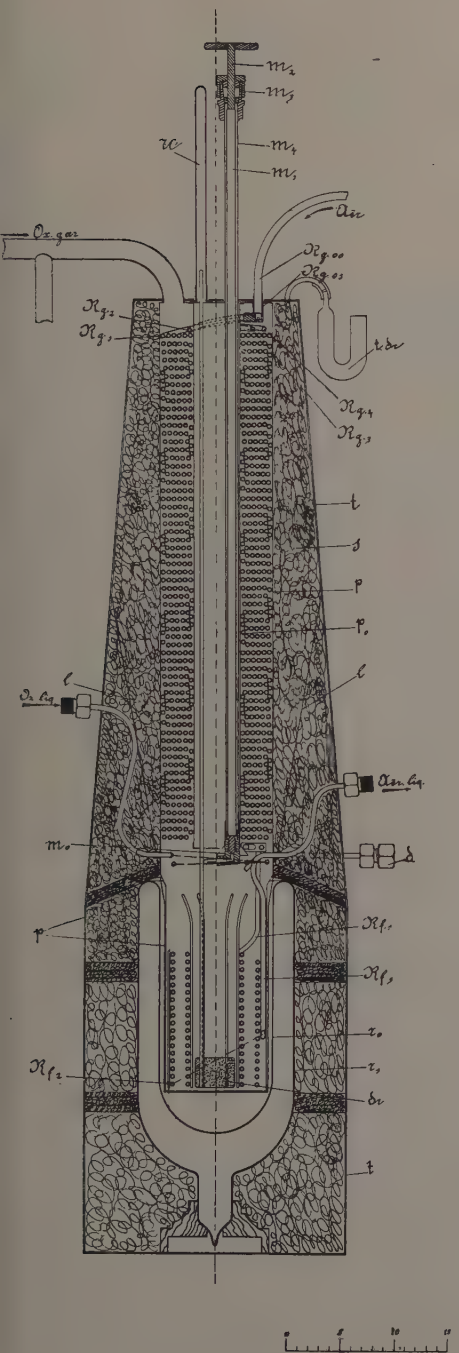

Fig. 1.

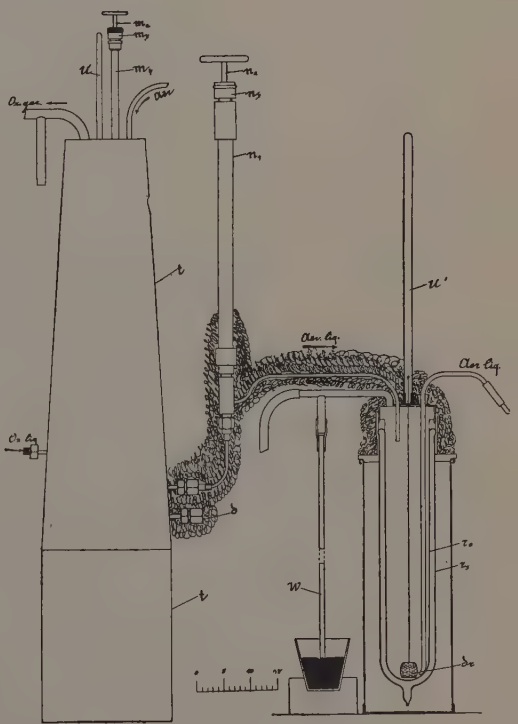

Fig. 2.

produced by the regenerative cascade. Enough but not too much, because for operations with liquid hydrogen (comp. X) and also for other experimentations in the realm of cryogenic work it is very important that we should dispose of such a relatively abundant stock of liquid air as is produced by the Leiden cascade.

XIV. *Preparation of pure hydrogen through distillation of less pure hydrogen.*

It was obvious that we could obtain pure hydrogen for the replenishment of the thermometers and piezometers [1]) when we distil liquid hydrogen at reduced pressure [2]), and then evaporate the very pure liquid thus obtained. Therefore the following apparatus has been constructed (fig. 5).

A vacuum glass A is connected with the liquefactor (see Pl. I and III at N_0) or with a storage bottle, exhausted and filled with liquid hydrogen as indicated in X § 7. Then C (exhausted beforehand) in the vacuum glass B is filled several times out of A, and the vacuum glass B is connected with B_1 to the liquefactor and exhausted like A and also filled with liquid hydrogen and connected with the ordinary airpump at B_2 so that the hydrogen boils in B at 60 m.m. Then hydrogen is distilled over along c_1 into the reservoir C, we

---

1) In Comm. N°. 94*e* (June '05) I have mentioned that a purification through compression combined with cooling might be useful in the case of hydrogen even after the latter in the generating apparatus (Comm. N°. 27, May '96 and N°. 60, Sept. 1900) had been led over phosphorous pentoxide. I said so especially with a view to the absorption of water vapour as, with due working, the gas — at least to an appreciable vapour tension — cannot contain anything but H_2O and SO_4H_2. How completely the water vapour can be freed in this manner appears from a calculation of Dr. W. H. KEESOM, for which he made use of the formula of SCHEEL (Verh. D. phys. Ges. 7, p. 391, 1905) and from which follows for the pressure of water vapour (above ice) at $-180°$ C. 10^{-18} mm., so that water is entirely held back if the gas remains long enough in the apparatus. This holds for all substances of which the boiling point is higher than that of water (SO_3 vapours, grease-vapours etc.). The operation is therefore also desirable to keep back these substances. As to a gas which is mixed only with water there will remain, when it is led in a stream of 3 liters per hour through a tube of 2 cm. in diameter and 8 cm. in length over phosphorous pentoxide, no more than 1 m.gr. impurity per 40000 liters (MORLEY, Amer. Journ. of Sc. (3) 34 p. 149, 1887). This quantity of 1 m.gr. is probably only for a small part water (MORLEY, Journ. de chim. phys. 3, p. 241, 1905). Therefore the operation mentioned would not be absolutely necessary at least with regard to water vapour when a sufficient contact with the phosphorous pentoxide were ensured. But in this way the uncertainty, which remains on this point, is removed.

2) This application follows obviously from what has been suggested by DEWAR, Proc. Chem. Soc. 15, p. 71, 1899.

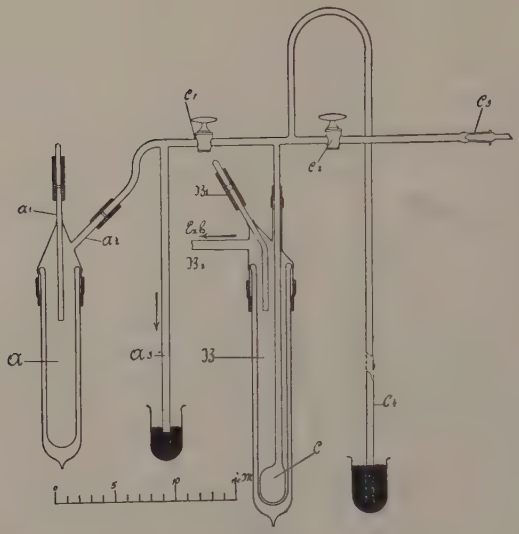

Fig. 5.

shut c_1 and disconnect the india rubber tube at a and remove the whole apparatus to the measuring apparatus which is to be filled with pure hydrogen; to this end the apparatus is connected with the mercury pump, intended for this purpose, at c_3. To take care that the hydrogen in B should evaporate but slowly and the quantity in C should not be lost before we begin to fill the pieces of apparatus, B is placed in a vacuum glass with liquid air.

Physics. — "*On the measurement of very low temperatures.* IX. *Comparison of a thermo-element constantin-steel with the hydrogen thermometer.*" By Prof. H. KAMERLINGH ONNES and C. A. CROMMELIN. Communication N° 95^a from the Physical Laboratory at Leiden.

(Communicated in the meeting of June 30, 1906).

§ 1. *Introduction.* The measurements communicated in this paper form part of a series, which was undertaken long ago with a view to obtain data about the trustworthiness of the determination of low temperatures which are as far as possible independent and intercomparable. Therefore the plan had been made to compare a thermo-element[1]), a gold- and a platinum-resistance thermometer[2])

[1]) Comp. comms. N°. 27 and 89. (Proc. Roy. Ac. May 1896, June 1896, and Feb. 1904).

[2]) Comp. comms. N°. 77 and 93. (Idem Febr. 1902 and Oct. 1904).

each individually with two gas thermometers and also with each other, while the deviation of the gas thermometer would be determined by means of a differential thermometer [1]). Nitrogen had originally been chosen by the side of hydrogen, afterwards nitrogen has been replaced by helium. Because all these measurements have often been repeated on account of constant improvements, only those figures have been given which refer to the gold- and the platinum-resistance thermometer [2]), and these, for which others will be substituted in Comm. N°. 95^c, are only of interest in so far as they show that the method followed can lead to the desired accuracy. The results obtained with regard to the above-mentioned thermo-element do not yet satisfy our requirements in all respects; yet all the same it appeared desirable to publish them even if it was only because the temperature determinations for some measurements, which will erelong be discussed, have been made with this thermo-element.

§ 2. *Comparisons made by other observers.*

a. Constantin-iron elements have been compared with a hydrogen thermometer only by HOLBORN and WIEN [3]) and LADENBURG and KRÜGEL [4]). The calibration of the two former investigators is based on a comparison at two points viz. in solid carbon dioxide and alcohol (for which — 78°.3 is given) and in liquid air (for which they found — 189°.1). They hold that the temperature can be represented by the formula

$$t = aE + bE^2$$

and record that at an observation for testing purpose in boiling oxygen (— 183°.2 at 760 m.m. mercury pressure) a good harmony was obtained.

LADENBURG and KRÜGEL deem HOLBORN and WIEN's formula unsatisfactory and propose

$$t = aE + bE^2 + cE^3.$$

They compare the thermo-element with the hydrogen thermometer at 3 points, viz. solid carbon dioxide with alcohol, boiling ethylene and liquid air. As a control they have determined the melting point of ether (— 112°) and have found a deviation of 1 deg. With this they rest satisfied.

---

[1]) Comp. comm. N°. 94^c. (Idem June 1905).

[2]) Comp. comm. N°. 93. (Idem Oct. 1904).

[3]) Sitz.ber. Ac. Berlin. Bd. 30, p. 673, 1896, and Wied. Ann. Bd. 59, p. 213. 1896.

[4]) Chem. Ber. Bd. 32, p. 1818. 1899.

ROTHE[1]) could only arrive at an indirect comparison with the hydrogen thermometer. He compared his thermo-elements constantin-iron at — 79° with the alcohol thermometer which WIEBE and BÖTTCHER[2]) had connected with the gas thermometer and at — 191° with a platinum-resistance thermometer which at about the same temperature had been compared with the hydrogen thermometer in the Phys. Techn. Reichsanstalt by HOLBORN and DITTENBERGER[3]).

The thermostat left much to be desired; temperature deviations from 0°.4 to 0°.7 occurred within ten minutes (comp. for this § 7). As ROTHE confined himself to two points, he had to rest content with a quadratic formula and he computed the same formula as HOLBORN and WIEN.

From the values communicated for other temperatures we can only derive that the mutual differences between the deviations of the different thermo-elements constantin-iron and constantin-copper from their quadratic formulae could amount to some tenths of a degree. Nothing is revealed with regard to the agreement with the hydrogen thermometer. This investigation has no further relation to the problem considered here.

b. Among the thermo-elements of other composition we mention that of WROBLEWSKI[4]), who compared his new-silver-copper element at + 100° (water), —103° (ethylene boiling under atmospheric pressure) and — 131° (ethylene boiling under reduced pressure) with a hydrogen thermometer and derived thence a cubic formula for t. He tested it by means of a determination of the boiling points of oxygen and nitrogen and found an agreement with the hydrogen thermometer to within 0°.1. As, however, WROBLEWSKI found for the boiling point of pure oxygen at a pressure of 750 m.m. —181°.5, no value can be attached to the agreement given by him.

DEWAR'S[5]) investigation of the element platinum-silver was for the time being only intended to find out whether this element was suited for measurements of temperatures at — 250° and lower (where the sensitiveness of the resistance thermometer greatly diminishes), and has been confined to the proof that this really was the case.

c. To our knowledge no investigation has therefore been made as yet, which like that considered in our paper, allows us to judge in

[1]) Ztschr. für Instrumentenk. Bd. 22 p. 14 and 33. 1902.

[2]) „ „ „ Bd. 10 p. 16. 1890.

[3]) Drude's Ann. Bd. 6 p. 242. 1901.

[4]) Sitzungsber. Ac. Wien Vol. 91. p. 667. 1885.

[5]) Proc. R. S. Vol. 76, p. 317. 1905.

how far thermoelements are suitable for the accurate determination of low temperatures (for instance to within $^1/_{20}^\circ$ precise), and also by what formula and with how many points of calibration any temperature in a given range can be determined to within this amount.

§ 3. *Modifications in the thermo-elements and auxiliary apparatus.* We shall consider some modifications and improvements which have not been described in § 1 of Comm. N°. 89. The first two (*a* and *b*) have not yet been applied to the element with which the following measurements are made, but they have afterwards been applied to other elements and so they are mentioned for the sake of completeness.

a. If we consider that the thermo-element in different measurements is not always used under the same circumstances, e.g. is not immersed in the bath to the same depth etc., and that even if this is the case, the time during which this is done at a constant temperature will not always be so long that in either case the same distribution of the temperature will be brought about in the metallic parts of the element, it will prove of the greatest importance that care should be taken, that the temperature of the juncture, given by the electromotive force, differs as little as possible and at any rate very little from that of the surface of the copper protecting block, that is to say that of the bath.

Fig. 1.

The construction of the place of contact shown by fig. 1 is a better warrant for this than that on Pl. I of Comm. N°. 89. The wires *a* and *b* are soldered on the bottoms of small holes *c*, bored in the protecting block and are insulated each by a thin-walled glass tube. If the construction of Pl. I Comm. N°. 89 is not carried out as it should be (whether this has succeeded will appear when we saw through trial pieces) and consequently the juncture is a little removed from the upper surface of the block, it may be easily calculated that, owing to conduction of heat along the wires while the thermo-element is immersed in liquid oxygen a difference in temperature of as much as one degree may exist between the place of contact and the block. When the elements are used under other circumstances, this difference in temperature will have another value and hence an uncertainty will come into the determination of the temperature of the block. Perhaps that also a retardation in the indications of the element will be observed.

Although this construction (fig. 1) (for which a block of greater thickness is required than for that of Comm. N°. 89, Pl. I) has not been applied to the element used, we need not fear uncertainties on this point thanks to the very careful construction of the latter.

b. When temperatures below —253° have to be determined we might fill the apparatus with helium instead of hydrogen as mentioned in § 1 of Comm. N°. 89.

c. The glass tubes of the mercury commutators, described in Comm. N°. 27, are not fixed in corks (see Pl. IV, fig. 4, *k*) but in paraffin, so as to obtain perfect insulation, which, as experience has taught, is not guaranteed by the glass wall. The tubes are continued beyond the sealing places of the platinum wires c_1 c_2 $c_3$and c_4, (as shown

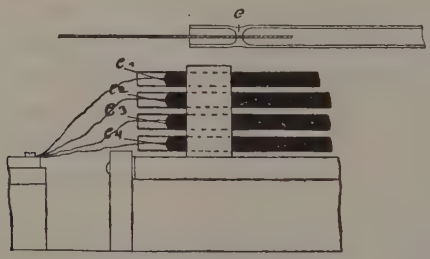

Fig. 2 and 3.

by figs. 2 and 3) to avoid breaking of the platinum wires as formerly frequently happened.

d. The platinum wires of the Weston-elements have been amalgamized by boiling with mercury (which method has since that time been replaced by the method with the electric current [1])). The elements themselves have kept good through all these years.

e. In spite of all the precautions which have been described in Comm. N°. 89, thermo-electromotive forces still remain in the wires, which with the great differences of temperature between various points of one wire must doubtlessly amount to a measurable quantity. When, however, care is taken that the circumstances under which the element is used with respect to the temperature along the wires are about the same as for the calibration, a definite value of the electromotive forces will answer to a definite temperature of the copper block. We do not aim at an accurate determination of the electromotive force of the combination of the metals which at the

[1]) Comp. JAEGER, Die Normalelemente, p. 57.

juncture are in contact with each other, but we only require that a definite electromotive force for a definite temperature of the bath in which the element is immersed should be accurately indicated. (for the rest comp. § 5).

In order to lessen the influence of the conduction of heat along the wire at the juncture we shall for the new elements destined for taking the temperature of a liquid bath make a trial with the insertion into the glass tube at 2 c.m. above the copper rim of the copper block of a copper tube, 5 c.m. long, which is soldered on either side of the glass tube and remains over its whole length immersed in the liquid.

§ 4. *Precautions at the measurements of the electromotive forces.*

a. The apparatus and connections which have been described in § 3 of Comm. N°. 89 have been mounted entirely on paraffin, with which also the enveloping portions of the apparatus are insulated. Only the wires running between the different rooms stretched on porcelain insulators, of which the high insulation-resistance has repeatedly been tested, have no paraffin-insulation. The ice-pots are hanging on porcelain insulators. As a matter of course, all parts of the installation have been carefully examined as to their insulation before they are used.

b. The necessity of continually packing together the ice in the ice-pots has been argued before in Comm. N°. 89.

c. The plug-commutators are of copper. All contacts between different metals in the connection have been carefully protected from variations of temperature by packing of wool or cotton-wool, from which they are insulated by paraffin in card-board boxes. This was only omitted at the contact places of the copper leads with the brass clips of the resistance boxes. To secure to the Weston-elements an invariable temperature, the latter have also been carefully packed. The accumulator is placed in a wooden box.

d. With regard to the testing elements, care has been taken that the steam left the boiling apparatus (comp. Comm. N°. 27, § 8) at a given constant rate.

e. Before a measurement is started we investigate by short-circuiting in the copper commutators in the conductions, leading from the thermo-elements and the Weston-battery to the connections, whether all electromotive forces in the connections are so small and constant (not more than some microvolts), that elimination through the reversal

of the several commutators may be considered as perfectly certain.

§ 5. *The control of the thermo-elements.*

It appeared:

a. that when the four places of contact were packed in ice, the electromotive force of the element amounted to less than one microvolt;

b. that the changing of the two places of contact constantin-steel, so that they were alternately placed in the cryostat, indicated only a very small difference in electromotive force. Care is taken, however, that always the same limb is placed into the cryostat;

c. that while the place of contact was moved up and down in the bath no difference could be perceived in the reading (hence the difference of temperature certainly $< 0°.02$).

All this proves that the electromotive forces which are raised in the element outside the places of contact, are exceedingly small.

§ 6. *Corrections and calculations of the determinations of the electromotive forces.*

a. In the following sections R_w R_c R' have the meaning which has been explained in Comm. N°. 89 § 3. E_w, E_c and E' signify the electromotive forces of the observation-element, the comparison-element and the Weston-battery respectively. If we have obtained R_w R_c and R' it follows that:

$$E_w = \frac{R_w}{R_c} E_c \text{ or } E_w = \frac{R_w}{R'} E'.$$

As a test we use:

$$E_c = \frac{E'}{R'} R_c .$$

b. In order to find R_w we read on the stops of the resistance box R'_w (in the branch of small resistance), and R''_w (in the branch of great resistance) which are switched in parallel to form R_w.

α. To none of the resistance boxes temperature corrections had to be applied (nor to those given by R_c and R' either).

β. To R'_w we sometimes had to add the connecting resistance of the stops.

γ. To R'_w is added the correction to international ohms according to the calibration table of the Phys. Techn. Reichsanstalt.

δ. To R''_w is added the amount required to render the compensation complete, which amount is derived from the deflections on

TABLE I.

Calibration of the thermo-element P_1, place of contact C in the cryostat.

6 July 1905. Series XV (oxygen boiling under reduced pressure) No. 1. Time: $3^h55'$—$4^h11'$.

Observation-element.							Comparison-element. Combination $P_3 + Q_c$.						Weston-elements.					
$R'_w = 50+2+1+1$. $R''_w = 7700$.				$R'_w = 50+2+1+1$ $R''_w = 7200$.			$R'_c = 50+1$. $R''_c = 3600$.			$R'_c = 50+1$. $R''_c = 3800$.			$R'_1 = 8000$.			$R'_1 = 8004$.		
Rheostat. S. and H. No. 15938.							Rheostat S. and H. No. 15689.						Rheostat No. 17161.					
Galvanometer deflections.							Galvanometer deflections.						Galvanometer deflections.					
Commutators		left	zero	right	left	zero	right	left	zero	right	left	zero	right	comm.	left	zero	right	left	zero	right
elem.	galv.																			
I	I	64.65	64.65		66.60	65.55		65.45	66.15		64.35	66.50		Galv.						
I	II		64.81	65.00		65.63	64.85		66.23	65.65		66.54	67.65	I	67.00	66.80		65.80	66.90	
II	I	65.50	65.35		67.25	65.70		67.80	66.35		66.65	66.60		II		66 84	66.65		66.96	68,20
II	II		65.42	65.50		65.84	64.75		66.43	63.60		66.72	65.55			66.90			67.00	
			65.50			66.00			66.50			66 80								

Barometerheight 76.14 cm. (Aneroïd Kipp. 2652)
$t = 19°.4$ (appertaining thermometer)

$t' = 18°.9$. (Thermometer No. 138)
$t_k = 19°.0$. (» » 96)
$t_g = 18°.8$. (» » 149)

the scale of the galvanometer at two values of R''_w (see tables I and IV).

c. In order to find R_c, R'_c and R''_c, which with regard to R_c have a similar meaning as R'_w and R''_w with regard to R_w, are treated like R'_w and R''_w concerning the corrections α, β, γ and δ. The thence derived result R'''_c holds for the temperature at which the water boils in the boiling apparatus at the barometric height B existing there during the observation.

ε. R'''_c is corrected to the value which it would have at a pressure of 760 m.m. mercury at the sealevel in a northern latitude of 45°.

d. To find R' the corrections mentioned sub γ and δ are applied to the invariable resistance R'.

e. E', referring to the temperature t' of the Weston-battery, is derived from JAEGER's table [1]).

§ 7. *Survey of a measurement.* Table I contains all the readings which serve for a measurement of the electromotive force namely for that at — 217° (comp. § 8). We suppose that during the short time required for the different readings (comp. § 3 of comm. N°. 89) the electromotive force of the accumulator (comp. § 4, *c*) remains constant. We further convince ourselves that the temperature in the boiling apparatus of the comparison-element has remained sufficiently constant and that we have succeeded [2]) in keeping the temperature of the bath in the cryostat constant to within 0°.01 [3]) (see table I).

In exactly the same way we have obtained on the same day of observation the values for the electromotive forces which are combined in table III.

From the preceding survey it appears that the measurements can be made with the desired precision even at — 217°. At — 253° the sensitiveness of the element constantin-steel is considerably less than at — 217°. It seems to us of interest to give also for this very low temperature a complete survey of the readings and adjustments so that the reader may judge of what has been attained there (see Table IV).

---

[1]) JAEGER, Die Normalelemente 1902. p. 118.

[2]) Comp. Comm. N°. 83, § 5 and Pl. III.

[3]) Together with the readings we have also recorded the temperature of the room (tk) and of the galvanometer (t_g); these are of interest in case one should later, in connection with the sensitiveness, desire to know the resistance of the galvanometer and the conducting wires during the observation. For the notation of the combination $P_3 + Q_2$ of the comparison-elements we refer to Comm. N°. 89 § 2.

From table I directly follows

TABLE II.

Corrections and results.

Observation-element.	Comparison-element.	Weston-elements.
corr. $\beta R'_w = +0.001\ \Omega$	corr. $\beta R'_c = +0.001\ \Omega$	
corr. $\gamma R'_w = +0.0080\ \Omega$	corr. $\gamma R'_c = -0.00015\ \Omega$	corr. $\gamma R'_1 = -2.4\ \Omega$
corr. $\delta R''_w = +179\ \Omega$	corr. $\delta R''_c = +149\ \Omega$	corr. $\delta R'_1 = +0.654\ \Omega$
	$R'''_c = 50.3163\ \Omega$	
	barom.hght.45°N.B.=76.21cM.	
	corr. $\varepsilon R'''_c = -0.0373\ \Omega$	

Final results.

$R_w = 53.6404\ \Omega$	$R_c = 50.2787\ \Omega$	$R' = 7998.3\ \Omega$
		$t' = 18°.8$
		$E' = 1.0187$ volt.
$E_w = 6.8312$ milliv.	$E_c = 6.4037$ milliv.	
4u 3′		

TABLE III.

	E_w	E_c
	6.8312	6.4037
	6.8308	6.4039
	6.8310	6.4038
Mean	6.8310	6.4038

§ 8. *The temperatures.*

a. The thermo-element is placed in a cryostat, as represented on the plate of Comm. N°. 94*d*, but there a piezometer takes the place which in our measurements was occupied by a hydrogen thermometer. To promote a uniform distribution of the temperature in the

TABLE IV.

Calibration of the thermo-element P_1, place of contact C in the cryostat.

5 May 1906. Series XXX. (Hydrogen, boiling under atmospheric pressure). No 1. Time: $2^h.19'—2^h.28'$.

Observation-element.							Comparison-element. Combination $P_3 + Q_2$.						Weston-elements.					
$R'_w = 50+5+1+0.5+0.1$ $R''_w = 5200$				$R'_w = 50+5+1+0.5+0.1$ $R''_w = 5400$			$R_c' = 50+0.5+0.2+0.1+0.1$ $R''_c = 5500$				$R'_c = 50+0.5+0.2+0.1+0.1$ $R''_c = 5300$		$R'_1 = 8000$			$R'_1 = 8004$		
Rheostat S. and H. No. 15398.							Rheostat S. and H. No. 15689.						Rheostat S. and H. No. 17161.					
Galvanometer deflections.							Galvanometer deflections.						Galvanometer deflections.					
Commutators		left	zero	right	left	zero	right	left	zero	right	left	zero	right	comm.	left	zero	right	left	zero	right
elem.	galv																			
I	I	39.15	39.89	39.87	40.83	40.32	39.16	38.82	41.08	39.84	38.45	41.63	41.50	Galv. I	42.90	43.10	43.84	45.20	43.55	42.28
I	II		39.94			40.38			41 22			41.81		II		43.34			43.66	
II	I	39.85	40.05		41.50	40.45		42.37	41.35		41.80	42.02				43.55			43.78	
II	II		40 17	39.70		40.65	39.18		41.49	36.80		42.15	38.65							
			40.32			40.90			41.63			42.20								

Barometer 76.77 cm. (Aneroïd Kipp. No. 2652)

$t = 18°.0$ (appertaining thermometer)

$t' = 18°.7$ (Thermometer No. 138).

$t_k = 19°.6$ (" No. 96).

$t_g = 19°.2$ (" No. 149).

TABLE V.

Corrections and results.

Observation-element.	Comparison-element.	Weston-elements.
corr. β. $R'_w = +0.001\ \Omega$	corr. β. $R'_c = +0.001\ \Omega$	
corr. γ. $R'_w = +0.00537\ \Omega$	corr. γ. $R'_c = +0.0084\ \Omega$	corr. γ. $R'_1 = -2.4\ \Omega$
corr. δ. $R''_w = +20\ \Omega$.	corr. δ. $R''_c = -209\ \Omega$	corr. δ. $R'_1 = +0.8\ \Omega$
	$R'''_c = 50.4133\ \Omega$	
	Bar.hght. 45° N.B. = 76.82 cM.	
	corr. ε $R'''_c = -0.1459\ \Omega$	

Final results.

$R_w = 55.9981\ \Omega$	$R_c = 50.2644\ \Omega$	$R' = 7998.4\ \Omega$
		$t' = 18°.5$
		$E' = 1.0187$ volt.
$E_w = 7.1321$ milliv.	$E_c = 6.4075$ milliv.	
$2^h24'$		

bath a tube is mounted symmetrically with the thermo-element, and has the same shape and dimensions as the latter. Comp. also Comm. N°. 94*c* § 1. For the attainment of a constant and uniform temperature with this cryostat we refer to Comm. N°. 94*d* and the Comms. quoted there. The temperature was regulated by means of a resistance thermometer. For the two measurements in liquid hydrogen we have made use of the cryostat described in Comm. N°. 94*f*.

b. With a bath of liquid methyl chloride we have obtained the temperatures $-30°$, $-59°$ and $-88°$; with ethylene $-103°$, $-140°$ and $-159°$; with oxygen $-183°$, $-195°$, $-205°$ $-213°$ and $-217°$; with hydrogen $-253°$ and $-259°$.

c. The temperatures are read on the scale of the hydrogen thermometer described in Comms. N°. 27 and N°. 60. On the measurements with this apparatus at low temperatures another communication will erelong be published.

§ 9. *Results.*

Column I of the following table VI contains the numbers of the measurements, column II the dates, column III the temperatures measured directly with the hydrogen thermometer, column IV the electromotive forces $-E_w$ in millivolts, column V the number of observations, column VI the greatest deviations in the different determinations of E_w of which the appertaining E_w is the mean, column VII the same reduced to degrees.

TABLE VI.

CALIBRATION OF THE THERMO-ELEMENT CONSTANTIN-STEEL.

I	II	III	IV	V	VI	VII
20	27 Oct. 05	— 58°.753	2.3995	3	0.0006	0°.016
21	30 Oct. 05	— 88.140	3.4825	3	29	81
17	8 July 05	— 103.833	4.0229	3	56	168
16	7 July 05	— 139.851	5.1469	3	6	21
18	26 Oct. 05	— 139.873	5.1469	4	12	41
19	26 Oct. 05	— 158.831	5.6645	3	15	59
11	27 June 05	—[182.692]	6.2297	3	10	46
28	2 Mrch. 06	— 195.178	6.4717	4	28	150
12	29 June 05	—[204.535]	6.6382	3	31	186
27	2 Mrch. 06	— 204.694	6.6361	4	26	156
14	30 June 05	—[212.832]	6.7683	3	8	56
13	6 July 05	— 212.868	6.7668	3	15	106
29	3 Mrch. 06	— 217.411	6.8221	3	14	112
15	6 July 05	— 217.416	6.8310	3	4	32
30	5 May 06	— 252.93	7.1315	4	17	39
31	5 May 06	— 259.24	7.1585	1	—	—

The observations 11, 12 and 14 are uncertain because in those cases the hydrogen thermometer had a very narrow capillary tube so that the equilibrium was not sufficiently secured. According to other simultaneous observations (Comm. N°. 95c at this meeting), which have later been repeated, the correction for N°. 11 is probably — 0°.058. The two other ones have been used unaltered.

The mean deviation of E_c for the different days from the mean value, and also the mean largest deviation of the values of E_c found on one day amounts to 3 microvolts, which amount shows that in the observation of the comparison-element the necessary care has not been bestowed on one or other detail, which has not been explained as yet. We must come to this conclusion because the observation-element yields for this mean only 1,8 microvolt.

§ 10. *Indirect determinations.*

In order to arrive at the most suitable representation of E_w as a function of t, it was desirable not only to make use of the observations communicated in § 9 but also to avail ourselves of a large number of indirect measurements, obtained through simultaneous observations of the thermo-element and a platinum-resistance thermometer, the latter having been directly compared with the hydrogen thermometer (comp. Comm. N°. 95^b, this meeting).

These numbers have been combined in table VII where the columns contain the same items as in the preceding table, except that here the temperatures are derived from resistance measurements.

TABLE VII.

INDIRECT CALIBRATION OF THE THERMO-ELEMENT CONSTANTIN-STEEL.

I	II	III	IV	V	VI	VII
22	13 Dec. 05	— 29°.825	1.2523	3	0.0005	0°.012
24	14 Dec. 05	— 58.748	2.3980	4	6	16
23	13 Dec. 05	— 88.161	3.4802	3	6	17
1	23 Jan. 05	— 103.576	4.0100	5	9	27
3	30 Jan. 05	[— 182.604]	6.2270	4	32	147
5	16 Mrch. 05	[— 182.828]	6.2340	3	13	60
4	2 Febr. 05	— 195.135	6.4730	3	20	107
6	17 Mrch. 05	— 195.261	6.4814	5	10	53
7	30 Mrch. 05	— 204.895	6.6397	3	55	330
26	26 Jan. 06	— 212.765	6.7637	4	33	233
8	3 April 05	— 212.940	6.7686	4	15	106
25	25 Jan. 06	— 217.832	6.8276	4	29	232

§ 11. *Representation of the observations by a formula.*

a.. It was obvious that the formula of AVENARIUS:

$$E = a\frac{t}{100} + b\left(\frac{t}{100}\right)^2$$

can give a sufficient agreement for a very limited range only. If, for instance, the parabola is drawn through 0°, —140° and —253°, we find:

$$a = + 4.7448$$
$$b = + 0.76117.$$

In this case the deviation at —204° amounts to no less than 7°. If we confine ourselves to a smaller range and draw the parabola through 0°, —88° and —183°, we find:

$$a = + 4.4501$$
$$b = + 0.57008,$$

while at —140° the deviation still amounts to 1°.3.

Such a representation is therefore entirely unsatisfactory.

b. With a cubic formula of the form

$$E = a\frac{t}{100} + b\left(\frac{t}{100}\right)^2 + c\left(\frac{t}{100}\right)^3$$

we can naturally attain a better agreement. If, for instance, we draw this cubic parabola through 0°, —88°, —159° and —253°, we find:

$$a = + 4.2069$$
$$b = + 0.158$$
$$c = - 0.1544$$

and the deviation at —204° is 0°.94. A cubic formula confined to the range from 0° to —183°, gave at —148° a deviation of 0°.34. [1]) A cubic formula for t, expressed in E (comp. § 2), gives much larger deviations. [2])

c. A formula, proposed by STANSFIELD [3]) for temperatures above 0°, of the form

---

[1]) As we are going to press we become acquainted with the observations of HUNTER (Journ. of phys. chem. Vol. 10, p. 319, 1906) who supposes that, by means of a quadratic formula determined by the points —79° and —183°, he can determine temperatures at —122° to within 0°.1. How this result can be made to agree with ours remains as yet unexplained.

[2]) After the publication of the original Dutch paper we have taken to hand the calculation after the method exposed in § 12 of a formula of the following form:

$$E = a\frac{t}{100} + b\left(\frac{t}{100}\right)^2 + c\left(\frac{t}{100}\right)^3 + e\left(\frac{t}{100}\right)^4.$$

We hope to give the results at the next meeting.

[3]) Phil. Mag. Ser. 5, Vol. 46, p. 73, 1898.

$$E = aT + b \log T + c,$$

where T represents the absolute temperature, proved absolutely useless.

d. We have tried to obtain a better agreement with the observations by means of a formula of five terms with respect to powers of t. To this end we have tried two forms:

$$E = a\frac{t}{100} + b\left(\frac{t}{100}\right)^2 + c\left(\frac{t}{100}\right)^3 + e\left(\frac{t}{100}\right)^5 + f\left(\frac{t}{100}\right)^7 \quad . \quad . \quad . \quad (A)$$

and

$$E = a\frac{t}{100} + b\left(\frac{t}{100}\right)^2 + c\left(\frac{t}{100}\right)^3 + e\left(\frac{t}{100}\right)^4 + f\left(\frac{t}{100}\right)^5 \quad . \quad . \quad . \quad (B)$$

First the constants of the two equations are determined so that the equations satisfy the temperatures —59°, —140°, —159°, —183° and — 213°. (*A*) indicated at — 253° a deviation of 113.1 microvolts, (*B*) a deviation of 91.8 microvolts. We have preferred the equation (*B*) and then have sought an equation (*B*IV) which would represent as well as possible the temperature range from 0° to — 217°, two equations (*B*I and *B*III) which would moreover show a not too large deviation at — 253°, for one of which (*B*III) a large deviation was allowed at — 217°, while for the other (*B*I) the deviations are distributed more equally over all temperatures, and lastly an equation (*B*II) which, besides —253°, would also include —259°.

§ 12. *Calculation of the coefficients in the formula of five terms.* The coefficients have first been derived from 5 temperatures distributed as equally as possible over the range of temperatures, and then corrected with respect to all the others without a rigorous application, however, of the method of least squares.

In order to facilitate this adjustment we have made use of a method indicated by Dr. E. F. VAN DE SANDE BAKHUYZEN in which instead of the 5 unknown coefficients 5 other unknown values are introduced which depend linearly on the former [1]). For these are chosen the exact values of E for the five observations used originally, or rather the differences between these values and their values found to the first approximation.

Five auxiliary calculations reveal to us the influence of small variations of the new unknown value on the representation of the other observations and by means of these an approximate adjustment

[1]) Also when we rigorously apply the method of least squares this substitution will probably facilitate the calculation.

may be much more easily brought about than by operating directly with the variations of the original coefficients [1]).

After the first preliminary formula was calculated all the 28 observations have subsequently been represented. The values thus found are designated by R_0. The deviations of the observed values from those derived from this first formula are given in column III of table VIII under the heading $W-R_0$. The deviations from the temperatures in the immediate neighbourhood of each other have been averaged to normal differences and are combined in column IV under the heading $(W-R_0)$.

These deviations have served as a basis for an adjustment undertaken according to the principles discussed above.

It yielded the following results:

leaving $-253°$ and $-259°$ out of consideration we find as coefficients of the equation (B) (comp. § 11):

$$\left.\begin{array}{ll} a_4 = +4.32044 & e_4 = +0{,}011197 \\ b_4 = +0{,}388466 & f_4 = -0{,}0044638 \\ c_4 = -0.024019 & \end{array}\right\} \quad . \quad . \quad . \quad . \quad (BIV)$$

If we only leave out of consideration $-259°$ we find for the coefficients of equation (B) the two following sets (comp. § 11):

$$\left.\begin{array}{ll} a_3 = +4.33049 & e_3 = +0{,}053261 \\ b_3 = +0.436676 & f_3 = +0{,}003898 \\ c_3 = +0{,}048091 & \end{array}\right\} \quad . \quad . \quad . \quad (BIII)$$

and

$$\left.\begin{array}{ll} a_1 = +4.35603 & e_1 = +0{,}103459 \\ b_1 = +0{,}531588 & f_1 = +0{,}0118632 \\ c_1 = +0{,}157678 & \end{array}\right\} \quad . \quad . \quad . \quad . \quad . \quad (BI)$$

If we include in the equation all the temperatures, also that of the liquid hydrogen boiling under reduced pressure, we find for the coefficients of the equation (B)

$$\left.\begin{array}{ll} a_2 = +4.35905 & e_2 = +0{,}111619 \\ b_2 = +0{,}542848 & f_2 = +0{,}0132130 \\ c_2 = +0{,}172014 & \end{array}\right\} \quad . \quad . \quad . \quad (BII)$$

The deviations from the observations shown by these different equations are found under $(W-R_1)$ $(W-R_2)$ $(W-R_3)$ and $(W-R_4)$ in columns V, VI, VII and VIII of table VIII.

[1]) When the polynomial used contains successive powers of the variable beginning with the first power, that influence is determined by the interpolation-coefficients of LAGRANGE.

TABLE VIII.

DEVIATIONS OF THE CALIBRATION-FORMULAE FOR THE THERMO-ELEMENT CONSTANTIN-STEEL.

I	II	III	IV	V	VI	VII	VIII
No.	t	$W-R_0$	$(W-R_0)$	$(W-R_1)$	$(W-R_2)$	$(W-R_3)$	$(W-R_4)$
22	— 29°.825	—0.0080	—0.0080	—0 0030	—0 0032	—0.0013	—0.0011
24	— 58.748	— 13	— 6	+ 26	+ 26	+ 16	+ 11
20	— 58.753	0					
21	— 88.140	+ 44	+ 29	+ 31	+ 32	+ 8	+ 7
23	— 88.161	+ 14					
1	—103.576	0	+ 14	+ 4	+ 4	— 16	— 11
17	—103.833	+ 43					
16	—139.851	+ 5	+ 1	— 20	— 20	— 18	+ 4
18	—139.873	— 2					
19	—158.831	0	0	— 20	— 20	— 10	— 5
3	[—182.604]	+ 41					
11	[—182.750]	+ 36	+ 47	+ 31	+ 33	+ 38	+ 31
5	[—182.828]	+ 63					
4	—195.135	+ 15					
28	—195.178	— 6	+ 28	+ 13	+ 17	+ 12	+ 4
6	—195.261	+ 76					
12	[—204 535]	+ 34					
27	—204.694	— 17	+ 5	— 10	— 5	— 20	— 20
7	—204 895	— 11					
26	—212.765	+ 21					
14	[—212.832]	+ 58	+ 40	+ 25	+ 29	+ 8	+ 22
13	—212.868	+ 38					
8	—212.940	+ 45					
29	—217.411	— 36					
15	—217.416	+ 52	— 7	— 23	— 19	— 45	— 185
25	—217.832	— 36					
30	—252.93	0	0	— 20	— 40	— 20	+ 280
31	—259.24	+ 87	+ 87	+ 68	+ 37	+ 90	+ 490

To observation 11 of this table we have applied the correction mentioned at table VI. To the observations 17 and 7 we have accorded half the weight on account of the large deviation from the single determinations mutually (comp. tables VI and VII) [1]).

§ 13. *Conclusion.* For the mean error of the final result for one temperature (when this is taken equal for all temperatures) we find by comparison with the formula found:

	microv.
R_1	$\pm$ 2.8
R_2	$\pm$ 3.2
R_3	$\pm$ 2.6 (2.1 when leaving also out of account — 217°)
R_4	$\pm$ 1.8

The mean error of the result of one day, according to the mutual agreement of the partial results, is:

$$\pm 2.9 \text{ microvolts,}$$

whence we derive for the mean error of one temperature, supposing that on an average two daily results are averaged to one final result:

$$\pm 2.0 \text{ microvolts.}$$

(2 microvolts agree at — 29° with 0°.05, at — 217° with 0°.16).

Hence it seems that we may represent the electromotive force of the thermo-element constantin-steel between 0° and — 217° by the five-terms formula to within 2 microvolts. For the calibration to — 217° we therefore require measurements at at least 5 temperatures [2]).

The representation including the temperatures of liquid hydrogen is much less satisfactory; for the mean error would be found according to this representation $\pm$ 3.2 microvolts, agreeing with 0°.075 at — 29° and 0°.74 at — 252° and — 259°.

In order to include the hydrogen temperatures into the formula a 6th term will therefore probably be required.

But for measurements at the very lowest temperatures the element constantin-steel is hardly suitable (comp. § 7).

In conclusion we wish to express hearty thanks to Miss T. C. Jolles and Messrs. C. Braak and J. Clay for their assistance in this investigation.

---

[1]) In the calculations for observations 3, 11 and 5 are used temperatures 0°,081 lower than the observed ones. A repetition of the calculation with the true values has not been undertaken, as it would affect only slightly the results, the more because the observations are uncertain.

[2]) If the four term formula (comp. footnote 2 § 11) should prove for this interval as sufficient as the five term formula, this number would be reduced to four.

Physics. — *On the measurement of very low temperatures. X. Coefficient of expansion of Jena glass and of platinum between + 16° and — 182°.*" By Prof. H. KAMERLINGH ONNES and J. CLAY. Communication N°. 95*b* from the Physical Laboratory at Leiden.

(Communicated in the meeting of June 30, 1906).

§ 1. *Introduction.*

The difference between the coefficients a and b in the expansion formula for the linear expansion $l = l_0\left[1 + \left\{a\frac{t}{100} + b\left(\frac{t}{100}\right)^2\right\}10^{-6}\right]$ and k_1 and k_2 in the formula for the cubic expansion

$$v_t = v_0\left[1 + \left\{k_1\frac{t}{100} + k_2\left(\frac{t}{100}\right)^2\right\}10^{-6}\right]$$

between 0° and — 182° found by KAMERLINGH ONNES and HEUSE (comp. Comm. N°. 85, June '03, see Proceedings of April '05) and those found by WIEBE and BÖTTCHER and THIESEN and SCHEEL for temperatures above 0° made it desirable that the strong increase of b at low temperatures should be rendered indubitable by more accurate measurements [1]).

In the first place we have made use of more accurate determinations of the variation of the resistance of platinum wires with the temperature (comp. Comm. N°. 95*c*, this meeting) in order to substitute more accurate temperatures for those given in Comm. N°. 85, which served only for the calculation of a preliminary formula, and then to calculate by means of them new values for a and b which better represent the results of the measurements than those given in Comm. N°. 85.

By means of the formula

$$W_t = W_0\,(1 + 0{,}00390972\,t - 0{,}0_6 9861\,t^2),$$

which holds for the kind of platinum wire used in Comm. N°. 85, we have arrived at the following corrections:

in table IV	read	— 87°,14	instead of	— 87°,87
	and	—181°,42	„ „	—182°,99
in table V	read	— 86°,98	„ „	— 87°,71
	and	—181°,22	„ „	—182°,79

[1]) That the coefficient of expansion becomes smaller at lower temperatures is shown by J. ZAKRZEWSKI by measurements down to — 103°. This agrees with the fact that the expansion of most substances above 0° is represented by a quadratic formula with a positive value of b. Our investigation refers to the question whether b itself will increase with lower temperatures.

Thence follows

Jena glass 16^{III}	$a = 781$	$b = 90$	1903.
	$k_1 = 2343$	$k_2 = 272.$	
Thüringer glass (n°. 50)	$a = 920$	$b = 120$	
	$k_1 = 2761$	$k_2 = 362.$	

Secondly it remained uncertain whether the mean temperatures of the ends were exactly identical with those found after the method laid down in § 4 of that Comm. The execution of the control-determination as described in Comm. N°. 85 § 4 (comp. § 4 of this paper) proved that in this respect the method left nothing to be desired.

Moreover, availing ourselves of the experience acquired at former determinations, we have once more measured the expansion of the same rod of Jena glass and have reached about the same results which, owing to the greater care bestowed on them, are even more reliable.

Lastly it was of importance to decide whether the great increase of b at low temperatures also occurred with other solid substances and might therefore be considered as a property of the solid state of several amorphous substances. Therefore and because it was desirable also for other reasons to know the expansion of platinum we have measured the expansion of a platinum rod in the same way as that of the glass rod. Also with platinum we have found the same strong increase of b, when this is calculated for the same interval at lower temperatures, so that cubic equations for the lengths of both substances must be used when we want to represent the expansion as far as $-182°$.

After these measurements were finished SCHEEL (Zeitschr. f. Instr. April 1906 p. 119) published his result that the expansion of platinum from $-190°$ to $0°$ is smaller than follows from the quadratic formula for the expansion above $100°$. For the expansion from $+16°$ to $-190°$ SCHEEL finds $-1641\,\mu$ per meter, while $-1687\,\mu$ would follow from our measurements. But he thinks that with a small modification in the coefficients of the quadratic formula his observations can be made to harmonize with those above $100°$. Our result, however, points evidently at a larger value of b below $0°$.

The necessity of adopting a cubic formula with a negative coefficient of t^3 may be considered as being in harmony with the negative expansion of amorphous quartz found by SCHEEL (l. c.) between $-190°$ and $16°$ when we consider the values of a and b in a quadratic formula for the expansion of this substance between $0°$ and $+250°$.

A more detailed investigation of these questions ought to be made of course with more accurate means. It lies at hand to use the method of FIZEAU. Many years ago one of us (K. O.), during a visit at Jena, discussed with Prof. PULFRICH the possibility of placing a dilatometer of ABBE into the Leiden cryostat, but the means of procuring the apparatus are lacking as yet. Meanwhile the investigation following this method has been taken in hand at the Reichsanstalt [1]). A cryostat like the Leiden one, which allows of keeping a temperature constant to 0,01° for a considerable time, would probably prove a very suitable apparatus for this investigation.

TRAVERS, SENTER and JAQUEROD [2]) give for the coefficient of expansion of a not further determined kind of glass between 0° and — 190° the value 0,0000218. From the mean coefficient of expansion from 0° to 100° we conclude that this glass probably is identical with our Thüringer glass.

The mean coefficient of expansion between 0° and — 190° for Thüringer glass found at Leiden in 1903 is 0,00002074.

§ 2. *Measurement of the coefficient of expansion of Jena glass and of platinum between* 0° *and* — 182°.

The rod of Jena glass used was the same as that of Comm. N°. 85.

At the extremities of the platinum tube of 85 c.m. length glass ends were soldered of the same kind as the Jena rod. For the determination of the mean temperature of the ends thin platinum wire was wound round these extremities which wire at either end passed over into two platinum conducting wires and was enveloped in layers of paper in order to diminish as much as possible the exterior conduction of heat.

The temperature of the middle portion of the Jena rod was also determined by means of a platinum wire wound round it as in Comm. N°. 85. The rod was further enveloped in thin paper pasted together with fishglue, and to test the insulation the resistance was measured on purpose before and after the pasting. The temperature of the bath was determined halfway the height of the bath by means of the thermo-element constantin-steel (comp. Comm. N°. 95*a*, this meeting).

This temperature was adopted as the mean temperature of the platinum tube, which was entirely surrounded with the liquid gas and was only at its extremities in contact with the much less

[1]) HENNING, afterwards SCHEEL, Zeitschr. f. Instrk. April 1905, p. 104 and April 1906, p. 118. RANDALL, Phys. Review 20, p. 10, 1905 has constructed a similar apparatus.

[2]) TRAVERS, SENTER and JAQUEROD, Phil. Trans. A 200.

conducting pieces of glass, which partly projected out of the bath.

The scale (comp. Comm. N°. 85) was wrapped round with a thick layer of wool enclosed in card-board of which the seams had been pasted together as much as possible. The temperature of the room was kept as constant as possible by artificial heating and cooling with melting ice, so that the temperatures of the scale vary only slightly.

They were read on three thermometers at the bottom, in the middle and at the top.

The scale and the points of the glass rods were illuminated by mirrors reflecting daylight or arc-light, which had been reflected by paper and thus rendered diffuse.

The vacuum tube (comp. Comm. N°. 85) has been replaced by a new one during the measurements. The evacuation with the latter had succeeded better. So much liquid gas was economized. For the measurement with liquid oxygen we required with the first tube $1^1/_4$ liter per hour and $^1/_4$ liter with the second. Of N_2O we used with the first only $^1/_4$ liter per $1^1/_4$ hour.

Fig. 1.

In order to prevent as much as possible irregularities in the mean temperature the bath has been filled as high as possible, while dry air was continually blown against the projecting points. They were just kept free from ice. In two extreme cases which had been chosen on purpose — the bath replenished with oxygen as high as possible and the points covered with ice, and the bath with the float at its lowest point and the point entirely free from ice — the difference of the mean temperature of the ends was 10 degrees, corresponding to a difference in length of 4 microns. The greatest difference which has occurred in the observations has certainly been smaller and hence the entire uncertainty of the length cannot have surpassed 2 microns.

At the lower extremities the difference is still smaller.

All this holds with regard to oxygen, in nitrous oxide such variations in the distribution of the temperature can be entirely neglected.

With some measurements we have observed that the length of the rods, when they had regained their ordinary temperature after cooling, first exceeded the original length, but after two days it decreased again to that value.

The cause of those deviations has not been explained. In a case where a particularly large deviation had been stated which did not altogether return to zero, it appeared, when the points were unwrapped, that a rift had come into the glass.

To see whether a thermical hysteresis had come into play a thermometerbulb (see fig. 1) with a fine capillary tube was filled with mercury. First the level of the mercury was compared with an accurate thermometer at the temperature of the room in a waterbath in a vacuum glass. Then the apparatus was turned upside down so that the mercury passed into the reservoir B, which is a little greater than A. Subsequently A and also a part of the stem was cooled down during 3 hours in liquid air in a sloping position so that thanks to the capillary being bent near B no mercury could flow back

TABLE I. — JENA GLASS 16^{III}.

Date	Time	Temp. scale	L_t	L_{160}	W_t	W_o	ϑ	λ
16 Dec.	2h.35	15.7	1026.285	1026.280	40.620		15.9	
1904	3h 50	16 0	.286	.279	40.786		17.0	
	4h.22	16.3	.292	.290	40.845		17.4	
20 Dec	1h.50	15.3	1025.571	1025.559	*s.* 3.503	5.021		λ_s= 40.6
	2h 10	15.4	.560	.550	*m.*25.029	38.28	−86.78	
	2h.30	15.4	.571	.561	*i.* 6.300	7.191		λ_i=22.1
21 Dec.	3h.15	14.6	1026.308	1026.291	*m.*40.523		15.1	
	3h.45	14.7	.299	.284			15.1	
	4h.15	14.7	.308	.289	*m* 40.583		15.6	
22 Dec.	10h 50	15.0	1025.108	1025.091	*s.* 2.105	5.021		λ_s=30.8
	12h.15	15.0	.112	.095	*m.* 9.880	38.28	−181.48	
	12h.50	15.0	.115	.098	*i* 5.005	7.191		λ_i=18.0
23 Dec.	12h.30	15.8	1026.341	1026.341	*m.*40.606		15.6	
	3h.	15.6	.339	.339			15.2	
	3h.30	15.6	.335	.336	*m.*40.537		15.2	
11 Jan.	3h.40	15.4	1026.288	1026.278	40.634		15.9	
1905	4h.30	15.5	.291	.280	40.703		16.4	

to A. When A had regained the temperature of the room the mercury was passed again from B into A and the apparatus replaced into the same waterbath as before. The deviation of the level of the mercury was of the same order as the reading error of the thermometer, about 0.003°. A perceptible thermical hysteresis therefore we do not find.

TABLE II. — PLATINUM.

Date	Time	Temp. scale	L_t	$L_{16°}$	W_t	W_o	ϑ	λ
16 Dec.	5h 50	16.5	1027.460	1027.461			17.0	
1904		16.4	1027.461	1027.459			17.0	
17 Dec. [1])	1h 45	16 6	1026.620	1026.630				
	9h 45	16 3	1026.618	622				
	10h 5	16.3	613	617				
19 Dec.	8h	14 8	1027.459	1027.442			15.5	
	8h 30	14.8	457	1027.440			15.5	
20 Dec.	3h	15.5	1026.627	1026.630	s3.475	4.993		$\lambda_s = 40.2$
	3h 30	15.5	630	633	m		−86.32	
	3h 55	15.4	631	635	i7.575	8.653		$\lambda_i = 31.5$
21 Dec.	4h 40	14.7	1027.460	1027.441			15.5	
	5h 10	14.9	459	444			15 5	
	6h	14.8	459	442			15.5	
22 Dec.	10h 40	15.3	1025.963	1025.951	s2.140	4.993		$\lambda_s = 28.9$
	11h 10	15.3	1025.973	961	m		−182.6	
	1h 45	14.9	1025.964	947	i5.649	8.653		$\lambda_i = 18.5$
23 Dec.	11h 25	15.7	1027.434	1027.436			15.0	
		15 6	440	441			15.0	
		15.7	440	442			15.2	
3 Febr.	2h	15.4	1027.463	1027.459			15.2	
		15.4	459	455			15.2	

[1]) Journ. Chem. Soc. 63. p. 135. 1893.

In table II (p. 204) the temperatures are used which are found with the thermo-element. A control-measurement with the thermo-element placed in the same vacuum tube without rod gave for the temperature in nitrous oxide $-87°,3$ instead of $-86°,32$.

The mean value of the two determinations is used for the calculation.

Another reason for the measurement of the temperature of the bath with a thermo-element as a control was the large difference between the mean temperature found by us and the boiling point of nitrous oxide $-89°$ given by RAMSAY and SHIELDS [1]).

As we are going to press we find that HUNTER [2]) has given $-86°.2$ for that temperature.

§ 3. *Results.*

Jena glass 16 III	**a 835**	**b 117**		
	k_1 2505	**k_2 353.**		**1905**
Platinum	**a 905,3**	**b 49,4**		
	k_1 2716	**k_2 148,4.**		

As regards platinum:

BENOIT finds	from 0° to 80°	*a* 890,1	*b* 12,1
SCHEEL	from 20° to 100°	*a* 880,6	*b* 19,5
HOLBORN and DAY	from 0° to 1000°	*a* 886,8	*b* 13,24

As to the differences between the values obtained now and those of Comm. N°. 85 (comp. § 1), we must remark that these are almost entirely due to the differences in the determinations of temperature. The uncertainties of the latter, however, do not influence in the least the conclusion about *b* and the necessity of a cubic formula.

There is every reason to try to combine our determinations on Jena glass above and below 0° in such a cubic formula. Taking into account also the previous determination 242.10^{-6} as the mean cubic coefficient from 0° to 100° (Comm. N°. 60, Sept. 1900, § 20) we find in the formula for the linear expansion below 0° and in the corresponding one for the cubic expansion

$$l_t = l_0\left[1 + \left\{a'\frac{t}{100} + b'\left(\frac{t}{100}\right)^2 + c'\left(\frac{t}{100}\right)^3\right\}10^{-6}\right]$$

Jena glass 16 III	**a'**	**789,4**	**k'$_1$**	**2368,1**
	b'	**39,5**	**k'$_2$**	**120,2**
	c'	**— 28,8**	**k'$_3$**	**86,2**

[1]) With this measurement in N_2O we have not obtained a temperature determination with the thermo-element. This determination is not included in the calculation. It is mentioned here on account of the agreement with the determination of 20 Dec., which for the rest has been made under the same circumstances.

[2]) Journ. Phys. Chem. May 1906, p. 356.

§ 4. *Control-experiment.*

The ends of the Jena glass rod were subsequently cut off and sealed together with a short intermediate rod. This short stick was placed in a glass of the same width as the vacuum tube with the same stopper and so short that the points projected in the same

TABLE III. — JENA GLASS ENDS.

Date	Temp. scale	L_t	$L_{16°}$	W_t	W_o	ϱ	λ
12 April 1905							
10h 15	15.4	227.684	227 683			15.4	
11h		.686	.685			15.4	
11h 43	15.4	227.684	227.682			15.5	
	15.4	.681	.679			15.5	
N_2O							
3h 50	15.4	227.533	227 536	s 3.473	5.021		$\lambda_s =$ 42.3
4h 24	15.4	.543	.541				
4h 52	15.4	.550	.548	i 5.490	7.191		$\lambda_i =$ 32.3
13 April	17.4	227.677	227.681			17.1	
14 April	16.2	227.675	227.676			15.9	
10h 10							
O_2							
2h 50	18.4	227.474	227.482	s 1.941	5.021		$\lambda_s =$ 35.5
4h22	18.9	.482	.494	i 4.683	7.191		$\lambda_i =$ 8.9
15 April	16.6	227.725	227 727			15.7	
11h 1	16.6	.724	.726			16.0	
4h 20	16.4	227.706	.708			15.8	
4h 46	16.4	.711	.713			16.0	
16 April	14.1	227.706	227.702			13.6	
17 April	14.2	227.682	227.678			14.0	
		.685	.681				

manner as those of the rods in the vacuum glass. Now we have taken only a double glass filled with wool, enveloped in a card-board funnel and tube for letting out the cold vapours.

The measurements are given in table III.

The λ's found in the experiment are of the same order of magnitude as those found with the long rods. The calculation with the coefficients a and b found in § 2 yields:

$L_{N_2O} = 227{,}547$ while we have found $L_{N_2O} = 227{,}544$

$L_{O_2} = 227.487$ „ „ „ „ $L_{O_2} = 227{,}488$.

In conclusion we wish to express hearty thanks to Miss T. C. Jolles and Miss A. Sillevis for their assistance in this investigation.

Physics. — "*On the measurement of very low temperatures.* XI. *A comparison of the platinum resistance thermometer with the hydrogen thermometer.*" By Prof. H. Kamerlingh Onnes and J. Clay. Communication N°. 95^c from the Physical Laboratory at Leiden.

(Communicated in the meeting of June 30, 1906).

§ 1. *Introduction.* The following investigation has been started in Comms. N°. 77 and N°. 93 VII of B. Meilink as a part of the more extensive investigation on the thermometry at low temperatures spoken of in Comm. N°. 95^a. In those communications the part of the investigation bearing on the electrical measurements was chiefly considered.

The hydrogen thermometer was then (comp. Comm. N°. 93 § 10) and has also this time been arranged in the same way as in Comm. N°. 60. Afterwards it appeared, however, that at the time the thermometer did not contain pure hydrogen, but that it was contaminated by air. The modifications which are consequently required in tables V and VI of Comm. N°. 93 and which particularly relate to the very lowest temperatures, will be dealt with in a separate communication.

Here we shall discuss a new comparison for which also the filling with hydrogen has been performed with better observance of all the precautions mentioned in Comm. N°. 60.

We have particularly tried to prove the existence of the *point of inflection* which may be expected in the curve (comp. § 6) representing the resistance as a function of the temperature, especially with regard to the supposition that the resistance reaches a *minimum* at very low temperatures, increases again at still lower temperatures and even becomes infinite at the absolute temperature 0 (comp.

Suppl. N°. 9, Febr. '04). And this has been done especially because temperature measurements with the resistance thermometer are so accurate and so simple.

From the point of view of thermometry it is important to know what formula represents with a given accuracy the resistance of a platinum wire for a certain range, and how many points must be chosen for the calibration in this range.

In Comm. N°. 93 § 10 the conclusion has been drawn that between 0° and — 180° a quadratic formula cannot represent the observations more accurately than to 0°.15, and that if for that range a higher degree of accuracy is required, we want a comparison with the hydrogen thermometer at more than two points, and that for temperatures below — 197° a separate investigation is required. In the investigation considered here the temperatures below — 180° are particularly studied; the investigation also embraces the temperatures which can be reached with liquid hydrogen.

It is of great importance to know whether the thermometer when it has been used during a longer time at low temperatures would retain the same resistance. We hope to be able later to return to this question. Here we may remark that with a view to this question the wire was annealed before the calibration. Also the differences between the platinum wires, which were furnished at different times by HERAEUS, will be considered in a following paper.

§ 2. *Investigations by others.* Since the appearance of Comm. N°. 93 there has still been published on this subject the investigation of TRAVERS and GWYER[1]). They have determined two points. They had not at their disposal sufficient cryostats such as we had for keeping the temperatures constant. About the question just mentioned: how to obtain a resistance thermometer which to a certain degree of accuracy indicates all temperatures in a given range, their paper contains no data.

§ 3. *Modification in the arrangement of the resistances.* The variation of the zero of the gold wire, mentioned in Comm. N°. 93 VIII, made us doubt whether the plates of mica between the metallic parts secured a complete insulation, and also the movability of one of the glass cylinders made us decide upon a modification in the construction of the resistances, which proved highly satisfactory and of which we

[1]) TRAVERS and GWYER. Z. f. Phys. Chem. LII, 4, 1905. The wire of which the calibration is given by OLSZEWSKI, 1905, Drude's Ann. Bd. 17, p. 990, is apparently according to himself no platinum wire. (Comp. also § 6, note 1).

have availed ourselves already in the regulation of the temperatures in the investigation mentioned in Comm. N°. 94*d*.

A difficulty adheres to this arrangement which we cannot pass by unnoticed. Owing to the manner in which this thermometer has been mounted it cannot be immersed in acid. Therefore an apparatus consisting entirely of platinum and glass remains desirable. A similar installation has indeed been realized. A description of it will later be given. The figures given here exclusively refer to the thermometer described in Comm. N°. 94*d* (p. 210).

Care has been taken that the two pairs of conducting wires were identical. Thus the measurement of the resistance is performed in a much shorter time so that both for the regulation of the temperature in the cryostat and, under favourable circumstances, for the measurement the very same resistance thermometer can be used.

§ 4. *The temperatures.*

The temperatures were obtained in the cryostat, described in Comm. N°. 94*d*, by means of liquid methyl chloride —39°, —59°, —88°, of liquid ethylene — 103°, — 140°, — 159°, of liquid oxygen — 182°, — 195°, — 205°, — 212°, — 217°, by means of liquid hydrogen — 252° and — 259°. The measurements were made with the hydrogen thermometer as mentioned in § 1.

§ 5. *Results for the platinum wire.* These results are laid down in table I (p. 210).

The observations marked with [ ] are uncertain on account of the cause mentioned in Comm. N°. 95*a* § 10 and are not used in the derivation and the adjustment of the formulae. For the meaning of $W—R_{A_I}$ in the column "remarks" I refer to § 6.

§ 6. *Representation by a formula.*

a. We have said in § 1 that the quadratic formula [1]) was insufficient even for the range from 0° to —180°.

If a quadratic formula is laid through — 103° and — 182°, we find :

---

[1]) The correction of CALLENDAR, used at low temperatures by TRAVERS and GWYER, Z. f. Phys. Chem. LII, 4, 1905 comes also to a quadratic formula. DICKSON's quadratic formula, Phil. Mag. June 1898, is of a different nature but did not prove satisfactory either; comp. DEWAR Proc. R. Soc. 64, p. 227, 1898.

The calibration of a platinum thermometer through two fixed points is still often applied when no hydrogen thermometer is available (for instance BESTELMEYER Drude's Ann. 13, p. 968, '04).

TABLE I.

COMPARISON BETWEEN THE PLATINUM RESISTANCE THERMOMETER AND THE HYDROGEN THERMOMETER.

Date	Temperature hydrogentherm.	Resistance measured	Remarks
0°	0°	137 884 Ω	mean of 5 measurements.
27 Oct. '05 5 h. 0	— 29.80	121.587	
2 h. 50	— 58.75	105.640	
30 Oct. '05 3 h. 50	— 88.14	89.277	
8 July '05 10 h. 12	— 103.83	80.448	
26 Oct. '05 5 h. 20	— 139.87	59.914	
7 July '05 4 h. 25	— 139.85	59.920	
26 Oct. '05 3 h. 16	— 158.83	48.929	
27 June '05 1 h. 40	[— 182.69]	34.861	$W-R_{Al}=-0.061$
30 June '06 11 h. 0	— 182.75	34.858	
27 June '05 3 h. 50	[— 195.30]	27.598	$W-R_{Al}=+0.082$
2 March '06 3 h. 35	— 195.18	27.595	
29 June '05 11 h. 6	[— 204.53]	22.016	$W-R_{Al}=-0.110$
2 March '06 1 h. 30	— 204.69	22.018	
30 June '05 3 h. 0	[— 212.83]	17.255	$W-R_{Al}=-0.082$
5 July '05 5 h. 53	— 212.87	17 290	
5 July '05 3 h. 20	— 217.41	14.763	
3 March '05 10 h. 0	— 217.41	14.770	
5 May '06 3 h. 0	— 252.93	1.963	
5 May '06 5 h. 7	— 259.24	1.444	

$$W_t = W_0 \left\{ 1 + 0{,}39097 \left(\frac{t}{100}\right) - 0{,}009862 \left(\frac{t}{100}\right)^2 \right\}.$$

For instance at $-139°$ it gives $W-R$: $+0{,}084$. A straight line may be drawn through $-182°$, $-195°$, $-204°$ and $-212°$ and then $-217°$ deviates from it by $0°{,}25$ towards the side opposite to $-158°$. Hence the existence of *a point of inflection* is certain (comp. sub *d*). Therefore it is evident that a quadratic formula will not be sufficient for lower temperatures.

b. But also a cubic formula, even when we leave out of account the hydrogen temperatures, appears to be of no use.

For the cubic formula through the points $-88°{,}14$, $-158°{,}83$, $-204°{,}69$, we obtain:

$$W_t = W_0 \left\{ 1 + 0{,}393008 \frac{t}{100} - 0{,}0_2 73677 \left(\frac{t}{100}\right)^2 + 0{,}0_3 58386 \left(\frac{t}{100}\right)^3 \right\}.$$

It gives for instance at $-182°$ a deviation of $-0{,}110$, at $-217°$ a deviation of $+0{,}322$ [1]).

c. In consequence of difficulties experienced with formulae in ascending powers of t, we have used formulae with reciprocal powers of the absolute temperatures (comp. the supposition mentioned in § 1 that the resistance becomes infinite at the absolute zero).

Three of these have been investigated:

$$\frac{W_t}{W_0} = 1 + a\frac{t}{100} + b\left(\frac{t}{100}\right)^2 + c\left(\frac{t}{100}\right)^3 + d\left(\frac{10^2}{T} - \frac{10^2}{273{,}09}\right) \quad (A)$$

$$\frac{W_t}{W_0} = 1 + a\frac{t}{100} + b\left(\frac{t}{100}\right)^2 + c\left(\frac{t}{100}\right)^3 + d\left(\frac{10^2}{T} - \frac{10^2}{273{,}09}\right) + e\left[\frac{10^4}{T^2} - \frac{10^4}{(273{,}09)^2}\right] \quad (B)$$

$$\frac{W_t}{W_0} = 1 + a\frac{t}{100} + b\left(\frac{t}{100}\right)^2 + c\left(\frac{t}{100}\right)^3 + d\left(\frac{10^2}{T} - \frac{10^2}{273{,}09}\right) + e\left(\frac{10^6}{T^3} - \frac{10^6}{(273{,}09)^3}\right) \quad (C)$$

We shall also try a formula with a term $\frac{e}{T^3}$ instead of $\frac{e}{T^2}$.

For the first we have sought a preliminary set of constants which was subsequently corrected after the approximate method indicated by Dr. E. F. VAN DE SANDE BAKHUYZEN (comp. Comm. N°. 95*a*) in two different ways. First we have obtained a set of constants A_I with which a satisfactory accurate agreement was reached down to $-217°$, a rather large deviation at $-252°$ and a moderate deviation at $-259°$. Column $W-R_{AI}$ of table II contains the deviations. Secondly we have obtained a set of constants which yielded a fairly

[1]) These values deviate slightly from those communicated in the original.

accurate agreement including — 252°, but a large deviation at — 259°. These are given in table II under the heading $W-R_{AII}$.

Lastly we have obtained a preliminary solution B which fairly represents all temperatures including — 252° and — 259° and from which the deviations are given in table II under $W-R_B$, and a solution of the form C which agrees only to — 252° and to which $W-R_C$ relates.

The constants of the formulae under consideration are:

	A_I	A_{II}	B	C
a	+ 0.399625	+ 0.400966	+ 0.412793	+0.40082
b	— 0.0002575	+ 0.001159	+ 0.013812	+0.001557
c	+ 0.0049412	+ 0.0062417	+ 0.012683	+0.00557
d	+ 0.019380	+ 0.026458	+ 0.056221	+0.01975
e			— 0.0033963	—0.16501

TABLE II.

COMPARISON BETWEEN THE PLATINUM RESISTANCE THERMOMETER AND THE HYDROGEN THERMOMETER.

Temperature observed with the hydrogen thermometer.	Number of observations with the hydrogen therm.	Resistance observed in Ω	$W-R_{AI}$	$W-R_{AII}$	$W-R_B$	$W-R_C$
0°		137.884	0	0	0	0
— 29.80	3	121.587	+ 0.025	+ 0.066	+ 0.210	+ 0.063
— 58.75	3	105.640	+ 0.011	— 0.011	+ 0.153	+ 0.048
— 88.14	4	89.277	— 0 012	— 0.050	— 0.001	+ 0.008
— 103.83	3	80.448	— 0.023	— 0.061	— 0.075	— 0.015
— 139.87	3*	59.911	+ 0.004	— 0.005	— 0.082	— 0.005
— 158.83	3	48.929	+ 0.023	+ 0.044	0	+ 0.008
— 182.75	2	34.858	— 0.029	+ 0.027	+ 0.083	— 0.035
— 195.18	2	27.595	+ 0.009	+ 0.061	+ 0.148	+ 0.007
— 204.69	1	22.018	— 0.014	+ 0.012	+ 0.100	— 0.014
— 212.87	3	17.290	— 0.024	— 0.065	— 0.001	— 0.031
— 217.41	4*	14.766	+ 0.028	— 0.048	+ 0.270	+ 0.007
— 252.93	2	1.963	+ 2.422	+ 0.057	— 0.001	0
— 259.24	1	1.444	+ 0.199	— 4.201	0	

In those cases where the $W-R$ have been derived from two determinations the values in the 2nd column are marked with an * [1]).

If we derive from the differences between the observed and the computed values as far as $-217°$ the mean error of an observation by means of A_I, this mean error is expressed in resistance $\pm$ 0,025 Ω, in temperature $\pm$ 0°,044.

The mean error of an observation of the hydrogen thermometer, as to the accidental errors, amounts to 0°,02 corresponding in resistance to $\pm$ 0,010 Ω, while that of the determination of the resistance may be left out of consideration. We cannot decide as yet in how far the greater value of the differences between the observations and the formula is due to half systematic errors or to the formula.

For the point of inflection in the curve representing the resistance as a function of the temperature we find according to $B = 180°$ [2]).

In conclusion we wish to express hearty thanks to Miss T. C. Jolles and Mr. C. Braak for their assistance in this investigation.

Physics. — "*On the measurement of very low temperatures. XII. Comparison of the platinum resistance thermometer with the gold resistance thermometer.* By Prof. H. Kamerlingh Onnes and J. Clay. Communication N°. 95*d* from the Physical laboratory at Leiden.

(Communicated in the meeting of June 30, 1906).

§ 1. *Introduction.* From the investigation of Comm. N°. 93, Oct. '04, VIII it was derived that as a metal for resistance thermometers at low temperatures gold would be preferable to platinum on account of the shape of the curve which indicates the relation between the resistance and the temperature.

Pure gold seems also better suited because, owing to the signification of this metal as a minting material, the utmost care has been bestowed on it for reaching the highest degree of purity and the quantity of admixtures in not perfectly pure gold can be exactly determined. The continuation to low temperatures of the measurements described in Comm. N°. 93 VIII — which had to be repeated because, although Meilink's investigation just mentioned had proved the usefulness of the method, a different value for the resistance

[1]) The deviations of the last two lines differ a little from the original Dutch paper.

[2]) Owing to e being negative (B) gives no minimum; a term like that with e does not contradict, however, the supposition $w = \infty$ at $T = 0$ (§ 1) as the formula holds only as far as $-259°$.

had been found before and after the exposure of the wire to low temperatures — acquired a special value through this peculiarity of gold.

As will appear from what follows, the *point of inflection* of the resistance as a function of the temperature must lie much lower for gold than for platinum. Our favourable opinion about gold as a thermometric substance was confirmed with regard to temperatures to a little below —217°. With respect to the lower temperatures our opinion is still uncertain. A *minimum of resistance* seems not to be far off at —259°.

§ 2. *The apparatus and the measurements.* About the measurements we can only remark that they are performed entirely according to the methods discussed in Comm. N°. 93.

The pure gold was furnished through the friendly care of Dr. C. HOITSEMA. It has been drawn to a wire of 0,1 mm. in diameter by HERAEUS.

The gold wire was wound upon 2 cylinders, it was about 18 m. in length and its resistance at 0° was 51,915 Ohms. The temperatures were reached in the cryostat of Comm. N°. 94^d as in the investigation in Comm. N°. 95^c.

The determinations of temperature were made by means of the resistance of the platinum wire of Comm. N°. 95^c. The zero determinations before and after the measurements at low temperatures agreed to perfection (this agreement had left something to be desired in the measurements dealt with in Comm. N°. 93).

The measurements were made partly directly by means of the differential galvanometer, partly indirectly by comparing the gold resistance with a platinum resistance, which itself had been compared with the originally calibrated platinum resistance (comp. Comm. N°. 95^c).

§ 3. *The Results*, obtained after the direct and the indirect method are given in column 3 of table III and indicated by d and i respectively.

For the observations the cryostat was brought to the desired temperature by regulating it so that the resistance of the platinum wire had a value corresponding to this temperature, and by keeping this temperature of the bath constant during the measurements of the resistance of the gold wire. The temperatures given in table III are the temperatures on the hydrogen thermometer according to the observations of Comm. N°. 95^c belonging to the resistance of the platinum thermometer.

TABLE III.

CALIBRATION OF THE GOLD RESISTANCE THERMOMETER.

Date.	Temperature resistance.	Observed gold resistance.	$W-R_A$	$W-R_{B\,I}$	$W-R_{B\,II}$
1906	0	51.915 *d*	0	0	0
1 Febr. 5 h. 57	— 28°.96	46 137 *i*	— 0.002	— 0.018	+ 0.029
» 3 h. 40	— 58.58	40 326 *i*	+ 22	+ 12	+ 46
» 12 h. 25	— 87.43	34.640 *i*	— 27	— 3	— 2
12 June 2 h. 20	— 103.82	31.432 *d*	— 24	+ 15	+ 4
» 11 h.	— 139.86	24.284 *d*	— 28	+ 16	+ 10
17 Jan. 3 h. 20	— 159.11	20.394 *i*	— 28	— 1	+ 14
1 June 11 h. 50	— 182.75	15.559 *d*	+ 6	+ 4	+ 39
» 5 h. 8	— 195.18	12.980 *d*	+ 30	+ 19	+ 40
» 4 h.	— 204.69	10.966 *d*	+ 24	+ 18	+ 1
» 3 h.	— 212.87	9.203 *d*	— 2	0	— 76
12 Jan. 11 h.	— 216.25	8.460 *i*	— 30	— 17	— 128
18 May 4 h. 10	— 252.88	2.364 *d*	+ 1.059	+ 2	— 6
» 6 h.	— 259.18	2.047 *d*	+ 1.334	— 3.277	— 6

In order to agree with DEWAR, we ought to have found for the resistance of the gold wire at the boiling point of hydrogen 1.708 Ω instead of 2.364 Ω. Also the further decrease of the resistance found by DEWAR [1]) in hydrogen evaporating under a pressure of 30 mM. is greater than that was found by us. We may remark that this latter decrease of the resistance according to him would belong to a decrease of 4 degrees on the gas thermometer, and that we in accordance with TRAVERS, SENTER and JAQUEROD [2]) found a difference in temperature of 6,°3 between the boiling point of hydrogen at a pressure of 760 m.m. and of 60 m.m. (preliminary measurements).

§ 4. *Representation of the variation of the gold resistance by a formula.* As to this we refer to what has been said in Comm.

1) DEWAR, Proc. Roy. Soc. Vol. 68 p. 360. 1901.

2) TRAVERS, SENTER and JAQUEROD, Phil. Transact. A. 200. Proc. Roy. Soc. Vol. 68, p. 361, 1901.

N°. 95c, XII. § 6. The resistance of the gold wire can be represented fairly well as far as — 217° as a function of the temperature by a formula of the form A.

$$\frac{W_t}{W_o} = 1 + 0{,}39070\,\frac{t}{100} + 0.017936\left(\frac{t}{100}\right)^2 + \\ + 0{,}0085684\left(\frac{t}{100}\right)^3 + 0.0080999\left(\frac{T}{100} - \frac{100}{273.09}\right) . \quad (A)$$

This formula A is not fit to include the hydrogen temperatures. For the deviations $W—R_A$ comp. table III.

We have therefore made use of a formula B, and

$$\left.\begin{aligned}\frac{W_t}{W_o} = 1 &+ 0{,}382404\left(\frac{t}{100}\right) + 0{,}0102335\left(\frac{t}{100}\right)^2 + \\ &+ 0{,}0035218\left(\frac{t}{100}\right)^3 - 0{,}0268911\left(\frac{100}{T} - \frac{100}{273{,}09}\right) + \\ &+ 0{,}0052211\left\{\left(\frac{100}{T}\right)^3 - \left(\frac{100}{273{,}09}\right)^3\right\}\end{aligned}\right\} (B\,I)$$

is in good harmony down to — 253°, while

$$\left.\begin{aligned}\frac{W_t}{W_o} = 1 &+ 0{,}394548\left(\frac{t}{100}\right) + 0{,}0200118\left(\frac{t}{100}\right)^2 + \\ &+ 0{,}0102889\left(\frac{t}{100}\right)^3 + 0{,}0229106\left(\frac{100}{T} - \frac{100}{273{,}09}\right) \\ &- 0{,}00094614\left\{\left(\frac{100}{T}\right)^3 - \left(\frac{100}{273{,}09}\right)^3\right\}\end{aligned}\right\} (B\,II)$$

gives a fair harmony also at — 259° [1]).

The deviations are given under the headings $W—R_{B\,I}$ and $W—R_{B\,II}$ in columns 5 and 6 of table III. The mean error of an observation with respect to the comparison with formula $B\,I$ is ± 0,017 Ω in resistance and ± 0°,09 in temperature. Formula $B\,I$ gives for the point of inflection of the gold resistance — 220°.

Mathematics. — *"Quadratic complexes of revolution."* By Prof. Jan de Vries.

§ 1. When the rays of a complex can be arranged in reguli of hyperboloids of revolution with the same axis, then the complex can bear revolving about that axis. If such a complex of revolution Ω contains also the second regulus of each of the indicated hyperboloids, then it is symmetric with respect to each plane through its axis

[1]) The coefficients of the formulae and the values of the deviations, found at a renewed calculation, differ slightly from those given in the original Dutch paper.

and it can be distinguished as a *symmetric complex of revolution.* This is the case with the complexes of tangents of surfaces of revolution.

We determine the general equation of the quadratic complexes of revolution with axis OZ in the coordinates of rays

$$p_1 = x - x' \quad , \quad p_2 = y - y' \quad , \quad p_3 = z - z',$$
$$p_4 = yz' - zy' \quad , \quad p_5 = zx' - xz' \quad , \quad p_6 = xy' - yx'.$$

By substitution of

$$p_1 = \alpha\bar{p}_1 - \beta\bar{p}_2 \quad , \quad p_2 = \beta\bar{p}_1 + \alpha\bar{p}_2 \quad , \quad p_3 = \bar{p}_3,$$
$$p_4 = \alpha\bar{p}_4 - \beta\bar{p}_5 \quad , \quad p_5 = \beta\bar{p}_4 + \alpha\bar{p}_5 \quad , \quad p_6 = \bar{p}_6,$$

(where $\alpha^2 + \beta^2 = 1$) in the general quadratic equation we easily find that the equation of an Ω can contain terms only with

$(p_1^2 + p_2^2)$, $(p_4^2 + p_5^2)$, p_3, p_6, $(p_1 p_5 - p_2 p_4)$ and $(p_1 p_4 + p_2 p_5)$.

As the latter combination can be replaced by $-p_3 p_6$ in consequence of a wellknown identity we find for Ω the equation

$$A(p_1^2+p_2^2)+Bp_3^2+2Cp_3p_6+Dp_6^2+E(p_4^2+p_5^2)+2F(p_1p_5-p_2p_4)=0. \quad (1)$$

If $C = 0$, equation (1) does not change when x is replaced by $-x$; so it represents a *symmetrical* complex.

The coordinates of rays

$$q_1 = u - u' \quad , \quad q_2 = v - v' \quad , \quad q_3 = w - w' \quad ,$$
$$q_4 = vw' - wv' \quad , \quad q_5 = wu' - uw' \quad , \quad q_6 = uv' - vu' \quad ,$$

where u, v and w represent the coordinates of planes are connected with the coordinates p by the wellknown relations

$$p_1 : q_4 = p_2 : q_5 = p_3 : q_6 = p_4 : q_1 = p_5 : q_2 = p_6 : q_3.$$

So Ω can also be represented by

$$E(q_1^2+q_2^2)+Dq_3^2+2Cq_3q_6+Bq_6^2+A(q_4^2+q_5^2)+2F(q_2q_4-q_1q_5)=0 \quad . \quad . \quad (2)$$

This equation is found out of (1) by exchanging p_k and q_k, and of A, B, C, D, E, F and $E, D, C, B, A, -F$.

§ 2. The cone of the complex of the point (x', y', z') has as equation:

$$A(x-x')^2+A(y-y')^2+B(z-z')^2+2C(y'x-x'y)(z-z')+D(y'x-x'y)^2+$$
$$+E(z'y-y'z)^2+E(z'x-x'z)^2+2F(x-x')(x'z-z'x)+2F(y-y')(y'z-z'y)=0. \quad (3)$$

In order to find the equation of the singular surface we regard the cones of the complex whose vertices lie in XOZ and note the condition expressing that the section of such a cone and XOY breaks up into two right lines. After suppression of the factor z^2 which is to be rejected and substitution of $x^2 + y^2 = r^2$ for x^2, we find the equation

$$D(AE - F^2)r^4 + (AE + BD - C^2 - F^2)r^2(Ez^2 - 2Fz + A) + \\ + B(Ez^2 - 2Fz + A)^2 = 0 \quad . \quad . \quad . \quad . \quad . \quad . \quad (4)$$

As this can be decomposed into two factors of the form $Lr^2 + M(Ez^2 - 2Fz + A)$, *the singular surface* Σ *consists of two quadratic surfaces of revolution.*

These touch each other in the cyclic points I_1 and I_2 of the plane XOY and in the points B_1 and B_2 on OZ determined by

$$Ez^2 - 2Fz + A = 0.$$

The two surfaces cut each other according to the four isotropic right lines indicated by the equations

$$x^2 + y^2 = 0 \text{ and } Ez^2 - 2Fz + A = 0 \quad . \quad . \quad . \quad . \quad (5)$$

If Ω is symmetric ($C = 0$) the two parts of the singular surface have as equations

$$(AE - F^2)(x^2 + y^2) + B(Ez^2 - 2Fz + A) = 0, \quad . \quad . \quad (6)$$

$$D(x^2 + y^2) + Ez^2 - 2Fz + A = 0. \quad . \quad . \quad . \quad . \quad (7)$$

If we find $B = 0$ and $D = 0$, then Σ breaks up into the four planes (5) and Ω is a particular *tetraedal complex.*

Out of (3) it is easy to find that the cones of the complex of the points B_1, B_2, I_1 and I_2 break up into pencils of rays to be counted double.

These points shall be called *bisingular.*

§ 3. The rays of the complex resting on a straight line l touch a surface which is the locus of the vertices of the cones of the complex touched by l. This *axial surface* is in general of order four and of class four and possesses eight nodes. [1])

We shall determine the axial surface of OZ. The points of intersection $(0, 0, z')$ of an arbitrary cone of the complex with OZ are indicated by the equation

$$[E(x^2 + y^2) + B]z'^2 - 2[F(x^2 + y^2) + Bz]z' + [A(x^2 + y^2) + Bz^2] = 0.$$

This has two equal roots if

$$\{(AE - F^2)(x^2 + y^2) + B(Ez^2 - 2Fz + A)\}(x^2 + y^2) = 0 \quad . \quad (8)$$

So the axial surface of OZ consists of the two isotropic planes through the axis and a quadratic surface of revolution which might be called the *meridian surface.* If Ω is symmetrical, it forms part of the singular surface as is proved out of (6).

Also the axial surface of the right line l_∞ lying at infinity in XOY breaks up into two planes, and a quadratic surface. Its

[1]) Sturm, *Liniengeometrie* III, p. 3 and 6.

equation is found most easily by regarding the rays of the complex normal to XOZ. From $x = x'$, $z = z'$ ensues $p_1 = 0$, $p_3 = 0$, $p_4 = zp_2$, $p_5 = 0$, $p_6 = -xp_2$. By substitution in (1) we find

$$(A + Dx^2 + Ez^2 - 2Fz)\,p_2^2 = 0,$$

and from this for the indicated surface

$$D(x^2 + y^2) + Ez^2 - 2Fz + A = 0 \quad . \quad . \quad . \quad . \quad (9)$$

For the symmetrical complex this *parallel surface* is according to (7) the second sheet of the singular surface.

The planes of the pencils of rays of the bisingular points B_1, B_2 form the lacking part of the axial surface of l_∞. We can show this by determining the equation of the axial surface of the right line $z' = 0$, $y' = b$, and by putting in it $b = \infty$. We then find

$$(Ez^2 - 2Fz + A)\{D(x^2 + y^2) + Ez^2 - 2Fz + A\} = 0 \quad . \quad (10)$$

The *meridian surface*, the *parallel surface*, and the two parts of the singular surface belong to a selfsame pencil, having the skew quadilateral $B_1I_1B_2I_2$ as basis.

If in the equation of the cone of the complex the sum of the coefficients of x^2, y^2 and z^2 is equal to zero, then the edges form ∞^1 triplets of mutually perpendicular rays. The vertices of the *triorthogonal* (equilateral) *cones of the complex* belonging to Ω form the surface of revolution

$$(D + E)(x^2 + y^2) + 2Ez^2 - 4Fz + (2A + B) = 0 \quad . \quad . \quad (11)$$

It has two circles in common with each of the parts of Σ. These contain the vertices of the cones of the complex which break up into *two perpendicular planes.*

§ 4. The distance l_0 from a right line to OZ is determined by

$$l_0^2 = \frac{p_6^2}{p_1^2 + p_2^2}, \quad . \quad . \quad . \quad . \quad . \quad . \quad . \quad . \quad (12)$$

the angle λ between a ray and XOY by

$$tg^2\lambda = \frac{p_3^2}{p_1^2 + p_2^2} \quad . \quad . \quad . \quad . \quad . \quad . \quad . \quad . \quad (13)$$

So the condition $l_0\, tang\, \lambda = a$ furnishes the complex

$$p_3p_6 = a(p_1^2 + p_2^2) \quad . \quad . \quad . \quad . \quad . \quad . \quad (14)$$

Here we have a simple example of a *symmetrical complex of revolution.*

The equation

$$p_3^2 = a(p_1^2 + p_2^2) \quad . \quad . \quad . \quad . \quad . \quad . \quad . \quad (15)$$

determines a complex Ω whose rays form with the axis a constant angle, so they cut a circle lying at infinity.

The equation

$$a^2 p_3^2 = p_4^2 + p_5^2 \quad . \quad . \quad . \quad . \quad . \quad . \quad . \quad . \quad (16)$$

furnishes a complex Ω, whose rays cut the circle $x^2 + y^2 = a^2$. For XOY cuts each cone of the complex according to this circle.

If l represents the distance from a ray O then

$$l^2 = \frac{p_4^2 + p_5^2 + p_6^2}{p_1^2 + p_2^2 + p_3^2} \quad . \quad . \quad . \quad . \quad . \quad . \quad (17)$$

If XOY is displaced along a distance c in its normal direction, p_4 and p_5 pass into $(p_4 - cp_2)$ and $(p_5 + cp_1)$. So for the distance l_1 from a ray to the point $(0, 0, c)$ we have

$$l_1^2 = \frac{(p_4^2 + p_5^2 + p_6^2) + 2c\,(p_1 p_5 - p_2 p_4) + c^2\,(p_1^2 + p_2^2)}{p_1^2 + p_2^2 + p_3^2}. \quad (18)$$

If in this equation we substitute $-c$ for c we shall find a relation for the distance l_2 from the ray to point $(0, 0, -c)$.

The equation

$$\alpha_1 l_1^2 + \alpha_2 l_2^2 = \beta$$

furnishes a complex Ω with the equation

$$\{(\alpha_1 + \alpha_2)\,c^2 - \beta\}\,(p_1^2 + p_2^2) - \beta\,p_3^2 + (\alpha_1 + \alpha_2)\,(p_4^2 + p_5^2 + p_6^2) + \\ + 2\,(\alpha_1 - \alpha_2)\,c\,(p_1 p_5 - p_2 p_4) = 0. \quad . \quad . \quad . \quad . \quad . \quad (19)$$

This symmetrical complex is very extensively and elementarily treated by J. Neuberg (*Wiskundige Opgaven*, IX, p. 334—341, and *Annaes da Academia Polytechnica do Porto*, I, p. 137—150). The special case $\alpha_1 l_1 + \alpha_2 l_2 = 0$ was treated by F. Corin (*Mathesis*, IV, p. 177—179, 241—243).

For $l_1 = l_2$ we find simply

$$p_1 p_5 - p_2 p_4 = 0. \quad . \quad . \quad . \quad . \quad . \quad . \quad . \quad . \quad (20)$$

This complex contains the rays at equal distances from two fixed points. As c does not occur in the equation the fixed points may be replaced by any couple of points on the axis having O as centre [1]).

§ 5. When there is a displacement in the direction of OZ the coordinates of rays p_1, p_2, p_3 and p_6, do not change whilst we obtain

$$p_4 = \overline{p}_4 + h\overline{p}_2 \quad \text{and} \quad p_5 = \overline{p}_5 - h\overline{p}_1,$$

so

$$p_1 p_4 + p_2 p_5 = \overline{p}_1 \overline{p}_4 + \overline{p}_2 \overline{p}_5.$$

The forms $(p_4^2 + p_5^2)$ and $(p_1 p_5 - p_2 p_4)$ are now *not* invariant.

[1]) This complex is tetraedral. See Sturm, *Liniengeometrie*, I, p. 364.

When in equation (1) of the complex $\mathfrak{Q}$ the coefficients E and F are zero, the complex $\mathfrak{Q}$ is displaced in itself by each helicoidal movement with axis OZ. This complex can be called *helicoidal.*

The singular surface has as equation

$$(BD - C^2)(x^2 + y^2) + AB = 0; \quad . \quad . \quad . \quad . \quad . \quad (21)$$

so it consists of a cylinder of revolution and the double laid plane at infinity.

§ 6. By *homographic* transformation the complex $\mathfrak{Q}$ can be changed into a quadratic complex with *four real bisingular points.*

If we take these as vertices of a tetrahedron of coordinates $O_1O_2O_3O_4$, it is not difficult to show that the equation of such a complex has the form

$$A p_{12}^2 + B p_{34}^2 + 2 C p_{12} p_{34} + 2 D p_{13} p_{42} + 2 E p_{14} p_{23} = 0. \quad (22)$$

If we again introduce the condition that the section of the cone of the complex with one of the coordinate planes consists of two right lines we find after some reduction for the *singular surface*

$$A(D-E)y_1^2y_2^2 + 2\{AB-(C-D)(C-E)\}y_1y_2y_3y_4 + B(D-E)y_3^2y_4^2 = 0 \quad . \quad (23)$$

So this consists of two quadratic surfaces, which have the four right lines O_1O_3, O_1O_4, O_2O_3 and O_2O_4 in common.

For $A = 0$, $B = 0$ the complex proves to be tetraedral.

For $D = E$ the equation is reducible to

$$A p_{12}^2 + B p_{34}^2 + 2 (C - D) p_{12} p_{34} = 0,$$

and indicates two linear complexes.

For the axial surfaces of the edges O_1O_2 and O_3O_4 we find

$$x_3 x_4 \{ 2A x_1 x_2 + (D - E) x_3 x_4 \} = 0 \quad . \quad . \quad . \quad . \quad (24)$$

and

$$x_1 x_2 \{ 2B x_3 x_4 + (D - E) x_1 x_2 \} = 0 \quad . \quad . \quad . \quad . \quad (25)$$

For a point $(0, y_2, 0, y_4)$ of the edge O_2O_4 the cone of the complex is represented by

$$A y_2^2 x_1^2 + 2 (C - E) y_2 y_4 x_1 x_3 + B y_4^2 x_3^2 = 0; \quad . \quad . \quad (26)$$

so it consists of two planes through O_2O_4.

This proves that the edges O_1O_3, O_1O_4, O_2O_3, O_2O_4 are *double rays* of the complex [1]).

---

[1]) See STURM, *Liniengeometrie* III, pp. 416 and 417.

Physiology. — *"A few remarks concerning the method of the true and false cases."* By Prof. J. K. A. WERTHEIM SALOMONSON. (Communicated by Prof. C. WINKLER.)

The method of the true and false cases was indicated by FECHNER and used in his psychophysical investigations. He applied this method in different ways: first to determine the measure of precision (Präcisionsmasz) when observing difference-thresholds, afterwards to determine these difference-thresholds.

Already in the course of his first experiences arose the difficulty that not only correct and incorrect answers were obtained, corresponding with the "true" and "false" cases, but that also dubious cases occurred, in which the observer could not make sure as to the kind of difference existing between two stimuli, or whether there did exist any difference at all. FECHNER himself, and many other investigators after him, have tried in different ways to find a solution to this difficulty. What ought to be done with these dubious cases?

FECHNER has indicated several methods, which he subjected to an elaborate criticism. Finally he concluded that the method to be preferred to all others was that one, in which the dubious cases were distributed equally amongst the false and the true cases. If e. g. he found w true cases, v false cases and t dubious cases, he calculated his measure of precision as if there had been $w + \frac{1}{2}t$ true cases and $\frac{1}{2}t + v$ false cases.

Furthermore he showed that a method, employed especially by American experimental physiologists, in which the reagent is urged always to state a result, even if he remains in doubt, practically means the same thing as an equal distribution of the t cases amongst the true and the false cases.

FECHNER still worked out another method, by means of which the threshold value was first calculated from the true cases, then from both the true and dubious cases, whilst the final result was obtained with the aid of both threshold values.

A most elegant method to calculate the results of the method of the false and true cases has been pointed out by G. E. MÜLLER, starting from this view, that as a matter of necessity the three groups of cases must be present, and that they have equal claims to exist; that the number of cases belonging to each of these groups in any case, are equally governed by the well-known law of errors. From the figures for the true false and dubious cases the thresholdvalue may afterwards be calculated.

I need not mention some other methods, e.g. that of FOUCAULT,

that of JASTROW, because the method of FOUCAULT is certainly incorrect (as has been demonstrated among others by G. E. MÜLLER), whilst that of JASTROW is not quite free of arbitrariness.

Against all these different ways of using the method of the false and true cases, I must raise a fundamental objection, which I will try to elucidate here.

Whenever two stimuli of different physical intensity are brought to act on one of the organs of the senses, either the reagent will be able to give some information as to the difference between these stimuli, or he will not be able to do so. If he cannot give any information, then we have before us a dubious case, if on the contrary he is able to give some information, this information may either be correct, — this constituting a true case — or it may be incorrect, when we shall have a false case.

If the experiment is repeated a sufficient number of times, we shall have obtained at last a certain number of true cases w, of false cases v and of dubious cases t.

Generally it is admitted that the reagent has indeed perceived correctly w times, that he has been mistaken v times, that he was in doubt t times. If this premiss were correct, FECHNER's or G. E. MÜLLER's views might be correct too. This however is not the case. An error has already slipped into the premiss, as will become evident furtheron.

No difference of opinion exists as to the dubious cases. To this category belong first those cases, where the reagent got the impression of positive equality, and next those cases, where he did not perceive any difference, and consequently was in doubt. Together they embrace such cases only, in which a greater or lesser or even infinitesimal physical difference was not perceived.

Neither need any difference of opinion exist as regards the false cases. In these cases a stimulus has been acting on the organs of the senses, and information was given about the effect, but on account of a series of circumstances, independent of the will of the reagent, his judgment was not in accordance with the physical cause. The physical cause therefore has not been perceived, but accidental circumstances led the reagent to believe that he was able to emit a judgment, though this judgment, accidentally, was an incorrect one.

And now we are approaching the gist of the argument. If it be possible, that amongst a series of experiments a certain number occur, in which the reagent really does not perceive the physical cause, but is yet induced by chance to emit a judgment which proves to be an *incorrect* one, then there ought to be also a number of

cases, in which likewise the physical cause is not perceived, in which however by chance a judgment is emitted, though this time a *correct* one. These facts being dependent on circumstances beyond our will, the chances are equal that either a wrong or a right judgment may be given. If therefore we had v false cases, we may reasonably admit the existence of v cases, in which practically the physical cause has not been perceived, and where yet a judgment, this time a correct one, has been given. These v cases however have been recorded amongst the true cases, though they cannot be admitted as cases of correct perception: it is only in $w—v$ cases that we may suppose the physical cause to have been really and correctly perceived; in all other cases, in $2v + t$ cases therefore, there has been no perception of the real difference of the stimuli.

In this way we have only to consider two possibilities, constituting the *perceived* and *non-perceived* cases, the number of which I will indicate by ξ and χ. The supposition that we may apply the principles of the calculus of probability to them, is justified a priori.

This supposition is changed into a certainty, if we apply the mathematical relations, stated by FECHNER to exist between the numbers of true and false cases.

As is well known, FECHNER added to the number of true cases, obtained by the experiment, one half of the dubious cases: he used therefore in his calculation a rectified number of true cases $w' = w + \frac{1}{2}t$. In the same manner he corrected the number of false cases by adding to them likewise one half of the dubious cases: $v' = v + \frac{1}{2}t$.

In calculating the number of my perceived cases, I get $\xi = w—v$, whilst the number of non-perceived cases is represented by $\chi = t + 2v$. Evidently I may also express the number of perceived cases by

$$\xi = w^1 - v^1.$$

As FECHNER has given for the relative value of the corrected number of true cases the expression:

$$\frac{w^{1}_{\frac{1}{2}}}{w+t+v} = \frac{w+\frac{1}{2}t}{n} = \frac{1}{2} + \frac{1}{\sqrt{\pi}}\int_0^{Dh} \varepsilon^{-t^2} dt$$

and for the corrected relative number of false cases the expression:

$$\frac{x'}{w+t+v} = \frac{v+\frac{1}{2}t}{n} = \frac{1}{2} - \frac{1}{\sqrt{\pi}}\int_0^{Dh} \varepsilon^{-t^2} dt$$

we obtain from these immediately for ξ and χ the two relations:

$$\xi = \frac{2}{\sqrt{\pi}} \int_0^{Dh} \varepsilon^{-t^2} dt$$

and

$$\chi = 1 - \frac{2}{\sqrt{\pi}} \int_0^{Dh} \varepsilon^{-t^2} dt.$$

We find therefore that the way of dealing with the true, dubious and false cases as proposed by me, allows us to use FECHNER's well-known tables.

I wish to lay some stress here on the fact, that G. E. MÜLLER's formulae give the same result, saving only the well-known difference in the integral-limits: these latter being 0 and $(S_u \pm D)\, h_u$.

I need scarcely add that my remarks do not touch in the least the question about "thresholdvalue" between FECHNER and G. E. MÜLLER.

It is evident, that the result of the calculation of a sufficiently extensive series of experiments according to the principles, given in my remarks should give numbers, closely related to those either of FECHNER or of G. E. MÜLLER — depending on the limits of integration. Still I wish to draw special attention to the fact that the formulae of G. E. MÜLLER about the true, false and dubious cases are rather the statistical representation of a series of nearly identical psychological processes, whilst the opinion professed by me on the method of the false and true cases, represents a pure physiological view.

Finally my remarks show, that CATTELL and FULLERTON's way of applying the method of the true and false cases is less arbitrary than it seems to be at first sight. They take for the thresholdvalue the difference of stimuli with which the corrected number of true cases attains 75 %. Such being the case, ξ and χ are both $= 50$ %. They consider therefore the thresholdvalue to be a difference between two stimuli such, that there is an equal chance of this difference being perceived or not.

Chemistry. — "*The shape of the spinodal and plaitpoint curves for binary mixtures of normal substances.*" (Fourth communication: *The longitudinal plait.*) By J. J. VAN LAAR. (Communicated by Prof. H. A. LORENTZ.)

1. In order to facilitate the survey of what has been discussed by me up to now, I shall shortly resume what has been communicated on this subject in four papers in These Proceedings and in two papers in the Arch. Teyler.

a. In the *first* paper in These Proceedings (22 April 1905) the equation:

$$RT = \frac{2}{v^3}\left[x\,(1-x)\,(av-\beta\sqrt{a})^2 + a(v-b)^3\right] \quad . \quad . \quad . \quad (1)$$

was derived for the *spinodal* lines for mixtures of *normal* substances, on the supposition that a and b are independent of v and T, and that $a_{12} = \sqrt{a_1 a_2}$, while

$$(av-\beta\sqrt{a})^3\,[(1-2x)\,v - 3x\,(1-x)\beta] +$$
$$+ \sqrt{a}\,(v-b)^2\left[3(av-\beta\sqrt{a})\,(av-2\beta\sqrt{a}) + \frac{a(v-b)\,(v-3b)}{x(1-x)}\right] = 0 \quad (2)$$

was found for the v,x-projection of the *plaitpoint line*, when $\alpha = \sqrt{a_2} - \sqrt{a_1}$ and $\beta = b_2 - b_1$.

b. In the *second* paper in These Proceedings (27 May 1905) the shape of these lines for different cases was subjected to a closer examination. For the simplification of the calculations $\beta = 0$, i.e. $b_1 = b_2$, was assumed, so that then the proportion θ of the critical temperatures of the two components is equal to the proportion π of the two critical pressures. If we then put $\frac{\sqrt{a_1}}{\alpha} = \varphi$, $\frac{b}{v} = \omega$, $\frac{T}{T_0} = \tau$ (where T_0 is the "third" critical temperature, i. e. the plaitpoint temperature for $v = b$), the two preceding equations become:

$$\tau = 4\omega\,[x(1-x) + (\varphi + x)^2\,(1-\omega)^2] \quad . \quad . \quad . \quad . \quad (1a)$$

$$(1-2x) + 3(\varphi + x)\,(1-\omega)^2 + \frac{(\varphi + x)^3\,(1-\omega)^3\,(1-3\omega)}{x(1-x)} = 0. \quad (2a)$$

It now appeared that the plaitpoint curve has a *double point*, when $\varphi = 1{,}43$, i.e. $\theta = \pi = 2{,}89$. If $\theta > 2{,}89$, the (abnormal) case of fig. 1 (loc. cit.) presents itself (construed for $\varphi = 1$, $\theta = (1 + {}^1/_2)^2 = 4$); if on the other hand $\theta < 2{,}89$, we find the (normal) case of fig. 2 (loc. cit.) (construed for $\varphi = 2$, $\theta = 2{}^1/_4$).

At the same time the possibility was pointed out of the appearance of a third case (fig. 3, loc. cit.), in which the branch of the plaitpoint

line running from C_1 to C_2 was *twice* touched by a spinodal line. Here also the branch C_0A is touched by a spinodal line [in the first two cases this took place only once, either (in fig. 1, loc. cit.) on the branch C_1A (A is the point $x=0$, $v=b$), or (in fig. 2 loc. cit.) on the branch C_0A (C_0 is the before-mentioned third critical point)].

So it appeared that *all* the abnormal cases found by KUENEN may already appear for mixtures of *perfectly normal* substances.

It is certainly of importance for the theory of the critical phenomena that the existence of *two different branches* of the plaitpoint curve has been ascertained, because now numerous phenomena, also in connection with different "critical mixing points" may be easily explained.

c. In the *third* paper in These Proceedings (June 24, 1905)[1]) the equation:

$$\Delta=\frac{1}{T_1}\left(\frac{dT}{dx}\right)_0=\theta\sqrt{\frac{1}{\pi}}\left[\theta\sqrt{\frac{1}{\pi}}\left({}^3/_2-{}^1/_2\sqrt{\frac{1}{\pi}}\right)^2-1\right) \quad . . \quad (3)$$

was derived for the *molecular increase* of the lower critical temperature for the *quite general* case $a_2 \lessgtr a_1$, $b_2 \lessgtr b_1$, which equation is reduced to the very simple expression

$$\Delta=\theta(\theta-1) \quad . . . . . \quad (3^a)$$

for the case $\pi=1$ ($p_2=p_1$).

This formula was confirmed by some observations of CENTNERSZWER and BÜCHNER.

d. The *fourth* paper appeared in the Archives Teyler of Nov. 1905. Now the restricting supposition $\beta=0$ (see *b*) was relinquished for the determination of the *double point* of the plaitpoint line, and the quite general case $a_2 \lessgtr a_1$, $b_2 \lessgtr b_1$ was considered. This gave rise to very intricate calculations, but finally expressions were derived from which for every value of $\theta=\frac{T_2}{T_1}$ the corresponding value of $\pi=\frac{p_2}{p_1}$, and also the values of x and v in the double point can be calculated.

Besides the special case $\theta=\pi$ (see *b*) also the case $\pi=1$ was examined, and it was found that then the double point exists for $\theta=9{,}90$. This point lies then on the line $v=b$.

---

[1]) The three papers mentioned have together been published in the Arch. Néerl. of Nov. 1905.

e. The *fifth* paper (These Proceedings, Dec. 30, 1905) [1]) contained the condition for a *minimum critical (plaitpoint) temperature*, and that for a *maximum vapour pressure* at higher temperatures (i. e. when at lower temperatures the three-phase-pressure is greater than the vapour pressures of the components). For the first condition was found:

$$\theta < \frac{4\pi\sqrt{\pi}}{(3\sqrt{\pi}-1)^2}, \quad \ldots\ldots\ldots \quad (4)$$

for the second:

$$\theta < \frac{\pi}{2\sqrt{\pi}-1}, \quad \ldots\ldots\ldots \quad (5)$$

which conditions, therefore, do not always include each other [2]).

After this the connodal relations for the three principal types were discussed in connection with what had already been written before by KORTEWEG (Arch. Néerl. 1891) and later by VAN DER WAALS (These Proceedings, March 25, 1905). The successive transformations of main and branch plait were now thrown into relief *in connection with the shape of the plaitpoint line, and its splitting up into two branches as examined by me.*

f. In the *sixth* paper (Arch. Teyler of May 1906) the connodal relations mentioned were first treated somewhat more fully, in which also the p, x-diagrams were given. There it was proved, that the points R_1, R_2 and R'_2, where the spinodal lines touch the plaitpoint line, are *cusps* in the p,T-diagram.

Then a graphical representation was plotted of the corresponding values of θ and π for the double point in the plaitpoint line, in connection with the calculations mentioned under *d.*

Both the graphical representation and the corresponding table are here reproduced. The results are of sufficient importance to justify a short discussion.

We can, namely, characterize all possible pairs of substances by the values of θ and π, and finally it will only depend on these values, which of the three main types will appear. To understand this better, it is of importance to examine for what combination (π, θ) one type passes into another. As to the transition of type I to II (III), it is exactly those combinations for which the plaitpoint line has a double point. In fig. 1 (see the plate) every point of the

---

[1]) Inserted in the Arch. Néerl. of May 1906.

[2]) These results were afterwards confirmed by VERSCHAFFELT (These Proceedings March 31, 1906; cf. also the footnote on p. 749 of the English translation).

plane denotes a combination (θ, π), to which every time a certain pair of substances will answer.

$\theta = \frac{T_2}{T_1}$	$\pi = \frac{p_2}{p_1}$	x	v/b
1,00	7,50 en 0,13	0,96 en 0,040	2,57 en 2,57
1,19	7,21 » 0,13	0,94 » 0,036	2,49 » 2,60
1,71	6,26 » 0,13	0,84 » 0,025	2,26 » 2,68
1,88	5,76 » 0,13	0,78 » 0,021	2,18 » 2,71
2,04	5,42 » 0,12	0,72 » 0,018	2,11 » 2,74
2,22	4,94 » 0,12	0,63 » 0,014	2,02 » 2,79
2,89	2,89 » 0,12	0,24 » 0,003	1,73 » 2,87
9,90	1,00 » 0,11	0,01 » 0,001	1,00 » 2,95
∞	— » 0,11	— » 0,000	— » 3,00

In the said figure the line $C'APB$ denotes the corresponding values of θ and π from $\theta = 0$ to $\theta = 9{,}9$. For C' $\theta = 0$, $\pi = 9$, for A $\theta = 1$, $\pi = 7{,}5$; with $\theta = 2{,}22$ corresponds $\pi = 4{,}94$. (Case $\pi = \theta^2$ or $a_2 = a_1$); for P $\pi = \theta = 2{,}89$ (Case $\pi = \theta$ or $b_2 = b_1$); for B $\theta = 9{,}9$, $\pi = 1$. For values of $\theta > 9{,}9$ the double point would lie on the side of the line $v = b$, where $v < b$. It appears from the figs. 23, 24 and 25 of the said paper, that then the line BD $(\pi = 1)$ forms the line of demarcation between type I and II (III). For starting from a point, where $\pi < 1$ (however little) and θ is comparatively low, where therefore we are undoubtedly in region II (III), we see clearly that we cannot leave this region, when with this value of π that of θ is made to increase. For we can never pass to type I, when not for realizable values of v (so $< b$) a double point is reached, and now a simple consideration (see the paper cited) teaches, that for $\pi < 1$ a double point would always answer to a value of $v < b$.

Now it is clear that $\theta = 0, \pi = 9$ is the same as $\theta = \infty, \pi = {}^1/_9$; that $\theta = \pi = 2{,}89$ is identical with $\theta = \pi = {}^1/_{2{,}89} = 0{,}35$; etc., etc. (the two components have simply been interchanged), so that the line CA' will correspond with the line $C'A$, while $A'B'$ corresponds with AB. If we now consider only values of θ which are > 1, if in other words we always assume $T_2 > T_1$, we may say that the

region of the normal type II (III) is practically bounded by the lines ABD, AA' and $A'C$. On the right of ABD we have the abnormal type I ($C_2H_6 + CH_3OH$, ether $+ H_2O$); on the left of $A'C$ we have also the type I. But whereas in the first region of I the branches of the plaitpoint line are C_2C_0 and C_1A, they are C_1C_0 and C_2B (see figs. 23—25 loc. cit.) in the second region. It is namely easy to show, (loc. cit.), that for $\pi > 1$ the branches of the plaitpoint line are either C_1C_2 and C_0A (type II and III), or C_1A and C_0C_2 (type I), while for $\pi < 1$ these branches are C_1C_2 and C_0B (type II and III) or C_2B and C_0C_1 (type I). The line $\pi = 1$ divides therefore the region of type II (III) into two portions, where we shall resp. find the shape of the plaitpoint line branches mentioned (viz. for $\theta > 1$). But in practice it will most likely never happen, that with $\theta > 1$ a value of π corresponds which is much smaller than 1, for a higher critical pressure goes generally together with a higher critical temperature. We may therefore say that with a given value of π the abnormal type I is found when θ is *comparatively large* [larger than the double point (of the plaitpoint line) value of θ], whereas the normal type II (or III) appears when θ is *comparatively small* (smaller than the said double point value).

It is now of the greatest importance to examine, when type II passes into III, where the plaitpoint line C_1C_2 is twice touched by a spinodal line (in R_1 and R_2'). This investigation forms the conclusion of the last paper in the Arch. Teyler.

The calculations get, however, so exceedingly intricate, that they proved practically unfeasible for the general case $a_2 \gtrless a_1$, $b_2 \gtrless b_1$. Only the special cases $\beta = 0$ ($b_2 = b_1$ or $\pi = \theta$) and $\pi = 1$ admitted of calculation, though even then the latter was still pretty complicated.

Then it appeared, that for $\beta = 0$ the region of type III is exactly $= 0$, that it simultaneously appears and disappears in the double point P, where $\pi = \theta = 2{,}89$. But in the case $\pi = 1$ the region lies between $\theta = 4{,}44$ and $\theta = 9{,}9$ (the double point). This is therefore QB in fig. 1; i. e. for values of $\theta > 1$ and $< 4{,}44$ we find type II (see fig. 2^a); for $\theta = 4{,}44$ (in Q) the plaitpoint line gets a point of inflection (see fig. 2^b), whereas from $\theta = 4{,}44$ to $\theta = 9{,}9$ we meet with type III (fig. 2^c) with two points R_1 and R_2', where the spinodal lines touches the plaitpoint line. This type disappears in the double point P, where $\theta = 9{,}9$ and R_2 and R_2' coincide in P (fig. 2^d), and passes for values of $\theta > 9{,}9$ into type I (fig. 2^e). We point out, that the figs. 2^a—2^e represent an intermediate case (i. e. between $\pi = \theta$ and $\pi = 1$, see fig. 1), for in the case of

$\pi = 1$ the branch AR_2C_0 would coincide with AB ($v = b$). Therefore the special value 4,44 has been replaced by θ_q (the value of θ in Q) and the value 9,9 by θ_p (the value of θ in P).

Of the curve which separates type II from type III we know as yet only the points P and Q (see fig. 1) and the further course of this line is still quite unknown, for which reason we have denoted it by a dotted line.

In any case the investigations, described in the Arch. Teyler have *proved*, that this very abnormal type III *is possible for mixtures of normal substances*. If the critical pressures of the two components are the same ($\pi = 1$), then we meet with this type when θ lies between 4,4 and 9,9. The critical temperatures must therefore lie far apart, but not so far (see fig. 1) as would be necessary for the appearance of type I.

We shall once more emphatically point out that the *numeric* results of our investigation will naturally be modified, when b is not assumed to be independent of v and T, or when one of the two components should be associating substances. This will cause the types III and I to make their appearance *earlier* than has been derived above (i. e. with lower values of θ with for the rest equal values of π), but that *qualitatively* everything will remain unchanged. This appears already from the fact that the substitution of the quite general assumption $b_1 \lessgtr b_2$ for the simplified assumption $b_1 = b_2$ (in the first paper in the Arch. Teyler) has made no change is the existence of a double point in the plaitpoint line with certain corresponding values of θ and π, and that also the calculations for the limits of type III (in the second paper in the Arch. Teyler) may be carried out for the quite general case $b_1 \lessgtr b_2$. So the phenomena remain qualitatively the same for very different pairs of values of b_1 and b_2, and will therefore not change *essentially* either, when one definite pair of values, holding e. g. for the critical circumstances of one of the components, is subjected to changes, whether by association, or by other causes, when v or T change — no more as e. g. the critical phenomena for a simple substance will *essentially* change when b is no longer constant, but is supposed to be dependent of v and T, or when that substance forms complex molecules.

The longitudinal Plait.

2. In former papers it has been demonstrated that in the neighbourhood of C_0 a minimum plaitpoint temperature makes its appearance

both with type I in the line C_0C_2 and with type II in the line C_0A, and that therefore with decrease of temperature a *separate plait* begins to detach itself starting from C_0 at a definite temperature T_0 (the plaitpoint temperature in C_0), which plait will merge into the main plait (or its branch plait) later on in an homogeneous double point. The consequence of this is, that with type I e. g. at lower temperatures the main plait will always be *open* towards the side of the small volumes, so that increase of pressure will never cause the two split phases to coincide.

Let us however specially consider the case of type II. Here the usual course, inter alia described in the last cited paper in the Proceedings of Dec. 30, 1905, is this. At a certain temperature, passing from higher to lower temperatures, a spinodal curve touches the branch of the plaitpoint line AC_0 in R_2. In the well-known way a closed connodal curve begins to form within the connodal line proper, which closed curve gets outside the original connodal curve at lower temperatures, and gives rise to a new (branch) plait, and at the same time to a three phase equilibrium (figs. 3^a and 3^b). In many cases this branch plait has already appeared before the plait which starts from C_0, begins to develop at somewhat lower temperature. Later on the two branches coincide (at the minimum temperature in D), and then form again a continued branch plait (fig. 3^c). [1]).

Now for the special case $b_2 = b_1$ the point D lies always very near C_0 (see the paper in these Proceedings referred to under b. in § 1). If then e. g. $T_2/T_1 = 2^1/_4$, then $T_m/T_0 = 0{,}96$, when T_m represents the temperature in the minimum at D. The real longitudinal plait round C_0 exists then only at very high pressures (fig. 3^b), while the open plait of fig. 3^c can hardly be called a longitudinal plait, but is much sooner to be considered as the branch plait of the transverse plait which has joined the original longitudinal plait. Increase of pressure makes here always the two coexisting liquid phases approach each other, unless with very high pressures, when these phases diverge again.

The calculation proves that in the quite general case $b_1 \lessgtr b_2$ the point D may get much nearer in the neighbourhood of R_2, and also that the temperature in the plaitpoint C_0 may be comparatively high, so that in opposition to what has been represented in fig. 3^a the longitudinal plait has already long existed round C_0 before a three phase equilibrium has formed at M (fig. 4^a and 4^b). The meeting

[1]) In this and some other figures the spinodal curves seem to touch in the homogeneous double point D, instead of to intersect, as they should.

of this longitudinal plait, which has then already greatly extended, with the branch plait takes place much more in the neighbourhood of the line 1, 2 of the three phase triangle, so that after the meeting the plait assumes the shape drawn in fig. 4^c, which makes it for the greater part retain its proper character of longitudinal plait. So at first increase of pressure makes the phases approach each other (this portion may be exceedingly small, but as a rule it will exist); then further increase of pressure makes the phases 1 and 2 again diverge, till x_1 and x_2 approach to limiting values at $p = \infty$, without the longitudinal plait ever closing again — as was formerly considered possible [cf. inter alia VAN DER WAALS, Cont. II, p. 190 (1900)]. For in consequence of the minimum at D the longitudinal plait always encloses the point C_0. Only at temperatures higher than T_0, at which the longitudinal plait does not yet exist, there can be question of homogeneity till the highest pressures. But then the plaitpoint P belongs to the *branch plait* of the *transverse plait*, and *not* to the longitudinal plait. This is indicated among others by fig. 3^a, *after* the closed connodal curve in M has broken through the connodal curve proper of the transverse plait; or by fig. 3^b, *before* a longitudinal plait has developed round C_0.

Of course we may also meet with the case, that the plait round C_0 coincides with the branch plait at the moment that the latter with its plaitpoint just leaves the transverse plait, as shown in fig. 5^a, but this involves necessarily a *relation* between θ and π, and is therefore always a *very special case*. Then the branch plait happens to leave the transverse plait exactly in the minimum at D. After the meeting the plait shows the shape as traced in fig. 5^b. Now increase of pressure causes the two phases 1 and 2 to diverge *from the beginning*.

But the longitudinal plait round C_0 may also meet the connodal line of the transverse plait, *before* the closed connodal line has got outside the transverse plait (fig. 6^a). Then the three phase equilibrium does not develop, as in fig. 4^a, at the transverse plait (from which a branch plait issues), but at the *longitudinal plait* round C_0. The latter penetrates then further into the transverse plait, till its meets the isolated closed connodal curve in D (fig. 6^b), after which the confluence with it takes place in the unrealizable region (fig. 6^c).

This plait is then the *longitudinal plait proper*, of which there is generally question with mixtures of substances which are not miscible in all proportions. But we should bear in mind that just as well the above treated case of fig. 4 may present itself, with that of fig. 5 as transition case.

The calculation teaches that the transition case presents itself when the proportion θ of the critical temperatures of the two components is in the neighbourhood of 1, and the proportion π of the critical pressures is at the same time pretty large.

A clear representation of these different relations is also given by the two p, T-diagrams of fig. 7 and fig. 7^a. (The temperature of C_0 is there assumed to be lower than that of R_2, but it may just as well be higher). The plaitpoints p' on the part R_2A below the cusp are the unrealizable plaitpoints (see also figs. 3—6); the plaitpoints p on the part R_2M before M also (then the isolated closed connodal curve has not yet got outside the main plait); the plaitpoints P beyond M are all realizable.

So after the above we arrive at the conclusion that in all cases in which a distinct longitudinal plait appears of the shape as in figs. 4^c or 6^c (so when the minimum D lies near R_2), the critical mixing point M of the three phases need not always lie on the longitudinal plait (see fig. 4^a), and also that the longitudinal plait with its plaitpoint P will not always coincide with the transverse plait itself, but it can also coincide with the branch plait of the transverse plait, so that at that moment no three phase equilibrium, i. e. no vapour phase is found (see fig. 4^c). The two liquid phases 1 and 2, however, coincide in this case.

The case drawn in figs. 5^a and 5^b remains of course an exception, and the conditions for its occurrence may be calculated (see above). But this calculation, as well as that which in general indicates the situation of the points R_2, D and M, will be published elsewhere (in the Arch. Teyler). It is, however, self-evident that the above general considerations are by no means dependent on these special calculations.

It is perhaps not superfluous to call attention to the fact that the concentration x_3 of the vapour phase is neither in fig. 4^a, nor in fig. 5^a or 6^a, the same as the concentration of the two coinciding liquid phases $x_{1,2}$, as VAN DER LEE wrongly believes to have shown in his Thesis for the doctorate (1898), [see p. 66—69, 73—74 and Thesis III; also VAN DER WAALS, Cont. II, p. 181 (1900)]. Now we know namely, that when x_3 lies between x_1 and x_2 at lower temperatures, this need not continue to be so till x_1 and x_2 have coincided. The latter would be quite accidental; in general one of the maxima, e. g. in the p,x-line, which lie in the unstable region between x_1 and x_2, will get outside the plait before x_1 and x_2 have coincided. Cf. the figs. 12^a to 12^f in my Paper in These Proceedings of March 25 1905 and § 8 p. 669—670, and also the footnote on p. 665.

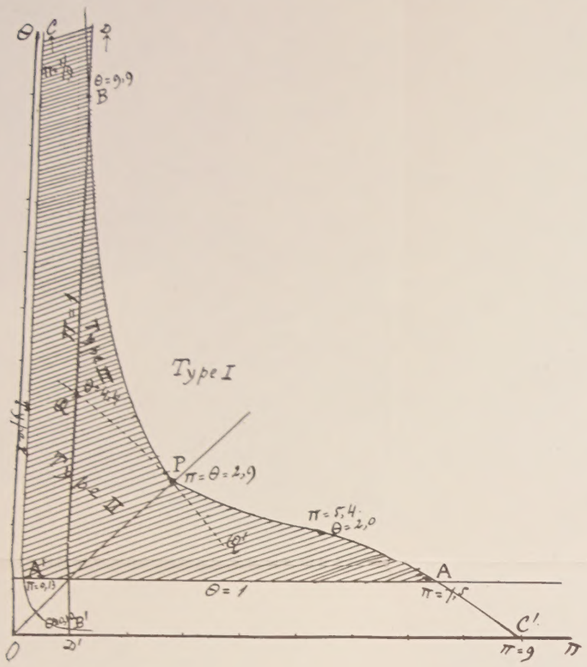

Fig. 1.

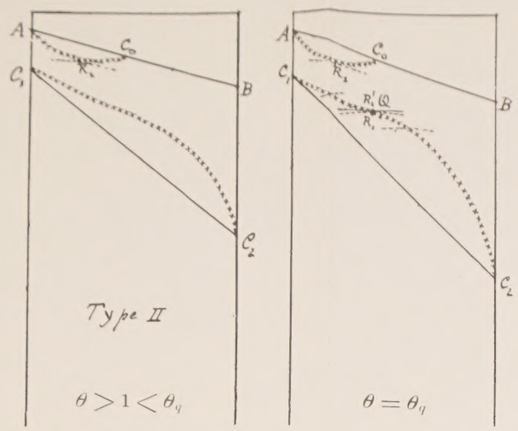

Fig. 2a.

Fig. 2b.

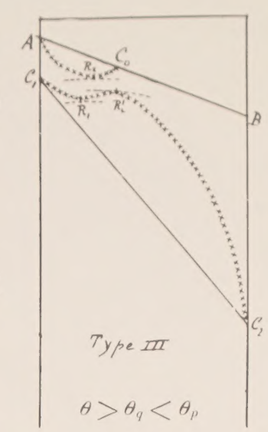

Fig. 2c.

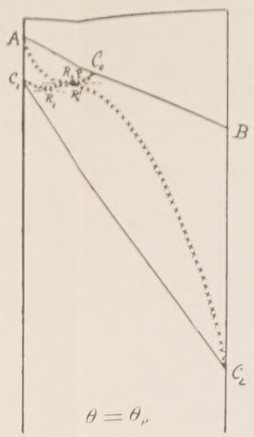

Fig. 2d.

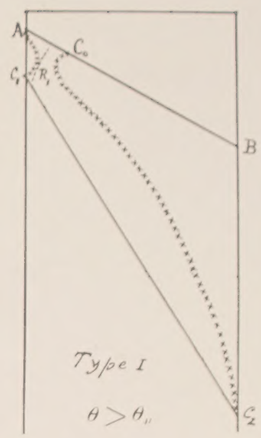

Fig. 2e.

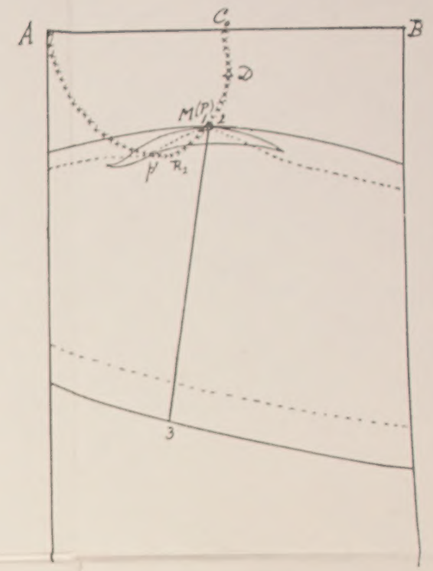

Fig. 3a.

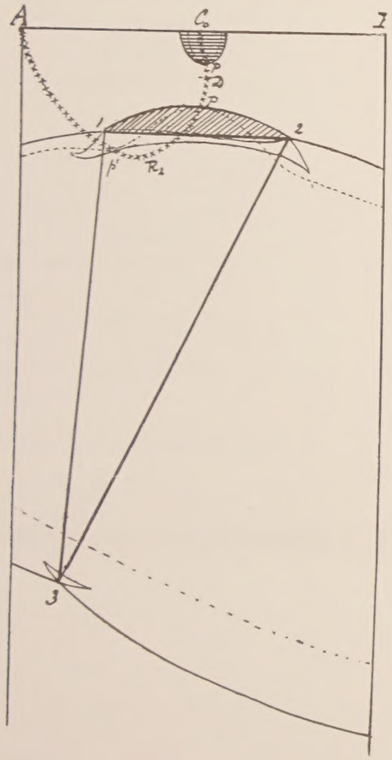

Fig. 3b.

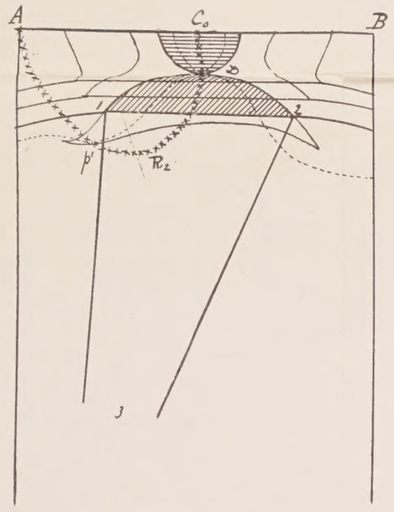

Fig. 3c.

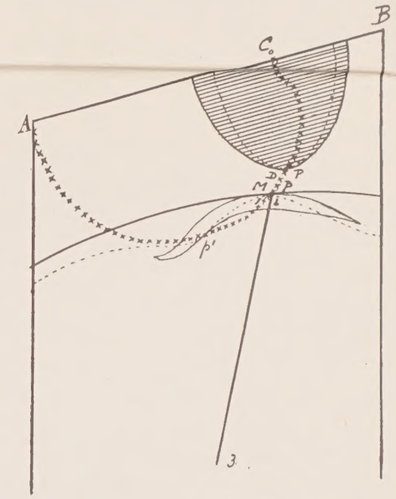

Fig. 4a.

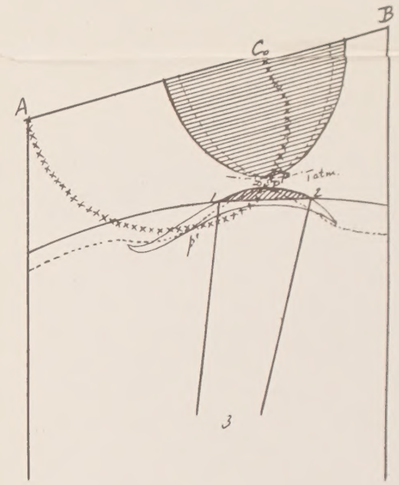

Fig. 4b.

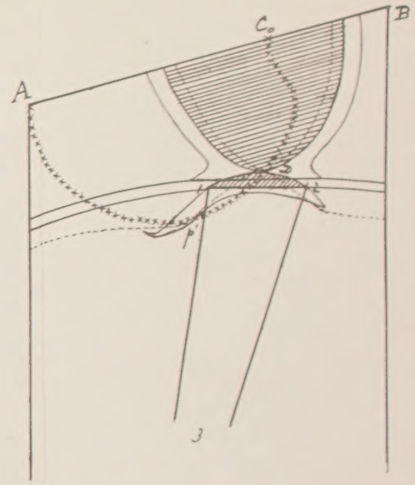

Fig. 4c.

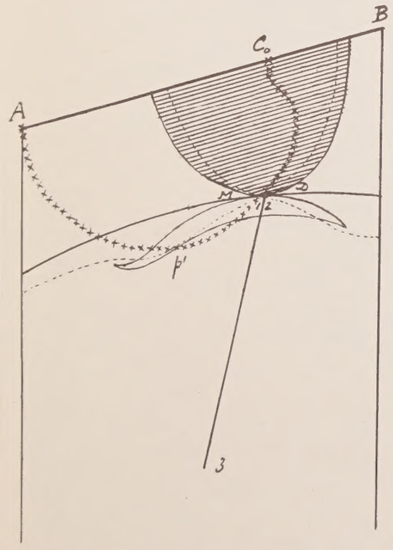

Fig. 5a.

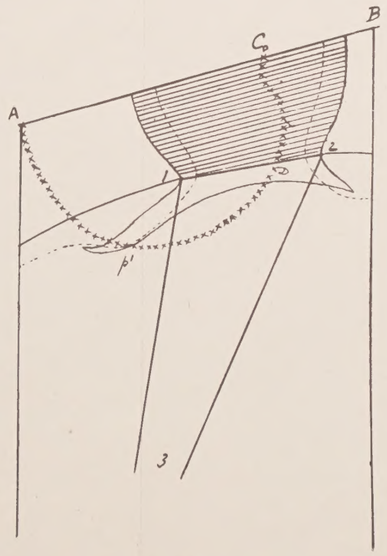

Fig. 5b.

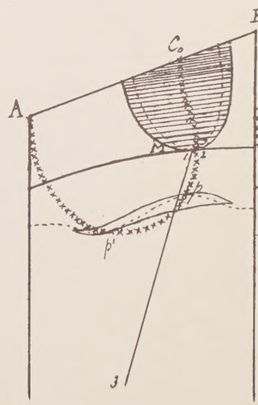

Fig. 6a.

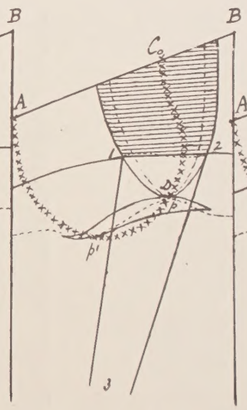

Fig. 6b.

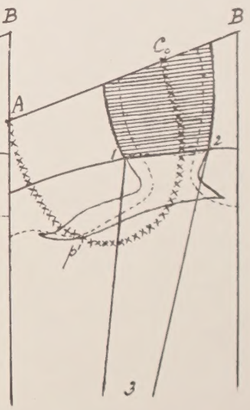

Fig. 6c.

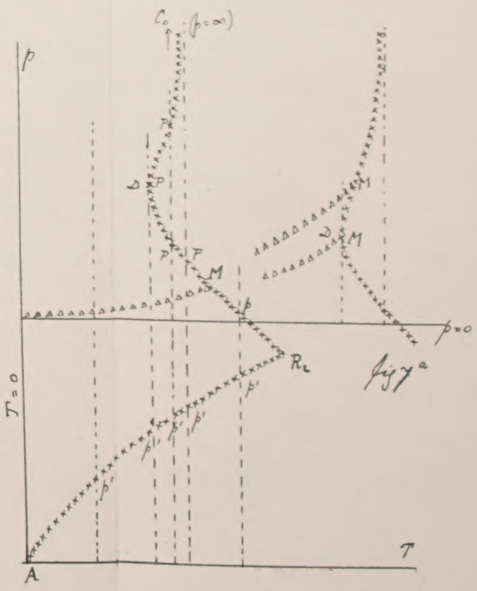

Fig. 7.

Already in a previous paper (These Proceedings June 27 1903) I had elaborately demonstrated this, and somewhat later (These Proceedings 31 Oct. 1903) KUENEN arrived at the same opinion independently of me. [1]) And in 1900 SCHREINEMAKERS (Z. f. Ph. Ch. **35**,p. 462—470) had experimentally demonstrated that one maximum leaves the longitudinal plait for exactly the same mixture (phenol and water), for which VAN DER LEE thought he could theoretically prove, that $x_3 = x_{1,2}$. [2])

Finally I shall just point out that in the peculiar shape of the p,T-diagram of the plaitpoint line (fig. 7) in the neighbourhood of the point D, and in the fact that the two critical moments represented by figs. 4^a and 4^c (as D and M in general do *not* coincide) do *not* coincide, the clue may be found for the explanation of a highly puzzling and as yet unexplained phenomenon, which has been observed as well by GUTHRIE as by ROTHMUND [Z. f. Ph. Ch. **26**, p. 446 (1898)] [3]) in their experiments, viz. the appearance and disappearance of a distinct cloudiness when the mixture is heated above the "critical temperature of mixing", which cloudiness often continued to exist up to 10° above this temperature.

---

[1]) C. f. also KUENEN: Theorie der Verdampfung und Verflüssigung von Gemischen. Leipzig 1906, p. 170, note.

[2]) For the rest the assumption $x_3 = x_{1,2}$ at the point M leads, as the calculations teach, not only to strange, but to highly absurd conclusions.

[3]) C. f. also FRIEDLÄNDER, Ueber merkwürdige Erscheinungen in der Umgebung des kritischen Punktes. Z. f. Ph. Ch. **38**, p. 385 (1901).

(October 25, 1906).